W22 Three-Phase Electric Motor

Industrial Motors

Commercial & Appliance Motors

Automation

Digital & Systems

Energy

Transmission & Distribution

Coatings

Technical Catalogue
European Market

Driving efficiency and sustainability

W22 Line

The increasing demand for electrical energy to sustain global development requires consistent heavy investments in power supply generation. However, in addition to complex medium and long term planning, these investments rely on natural resources, which are becoming depleted due to constant pressures upon the environment. The best strategy, therefore, to maintain energy supply in the short term is to avoid wastage and increase energy efficiency. Electric motors play a major role in this strategy, since around 40% of global energy demand is estimated to be related to electric motor applications. Consequently, any initiatives to increase energy efficiency, by using high efficiency electric motors and frequency inverters, are to be welcomed, as they can make a real contribution to reductions in global energy demand.

At the same time as efficiency initiatives make an impact in traditional market sectors, the application of new technologies in emerging sectors is resulting in profound changes in the way that electric motors are applied and controlled. By integrating these changes together with the demands for increased energy efficiency, WEG has taken up the challenge and produced a new design of high efficiency motor, one that exceeds the performance of the previous WEG's W21 motor line, which is recognised worldwide for its quality, reliability and efficiency.

Using the latest generation of computerised tools, such as structural analysis software (finite element analysis) and computer fluid dynamics, as well as electrical design optimization software, an innovative - next generation - product has been developed: the W22 motor.

Several key objectives have been achieved in the design of the W22 motor:

- Reduction of noise and vibration levels;
- Increased energy efficiency and reduced thermal footprint;
- Easy maintenance;
- Compatibility with present & future generations of frequency inverters;
- Flexible and modular design.

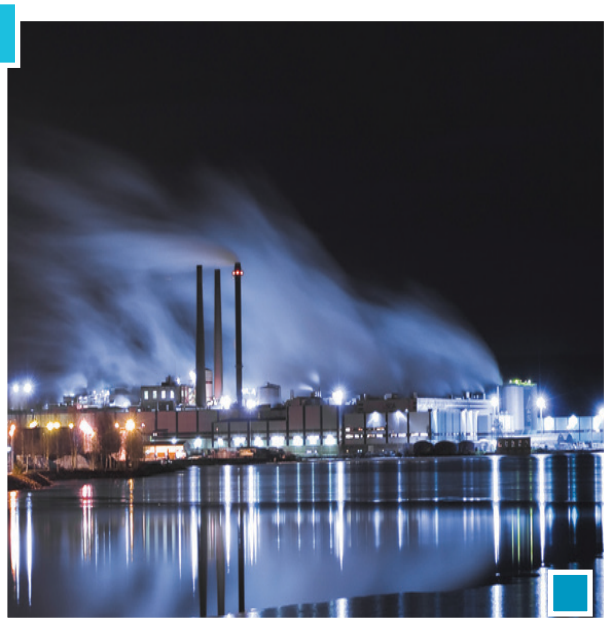

Sustainability and Carbon Emission Reduction Through Super Premium Efficiency Motors

The Super Premium Efficiency (IE4) level established in IEC 60034-30-1: 2014 is considered the highest efficiency class which a squirrel cage induction motor can achieve whilst remaining economically viable.

It is also the optimum solution to increase the efficiency of an existing application through direct replacement.

It may be argued that super premium efficiency motors are also super premium in price when comparing against standard efficiency (IE1), high efficiency (IE2) and premium efficiency (IE3) motors.

Whilst this is not strictly untrue, it should be appreciated when considering their lifetime that the cost of acquisition of an induction motor typically represents only 2% of the total cost of ownership. In contrast, the associated energy savings provided by Super Premium and Premium efficiency motors far outweigh this additional investment in purchase price.

The reduction in CO_2 emissions is one of the direct consequences, and therefore benefits, of increasing efficiency in industry. Using IE4 rated motors today will show that a company is serious about saving energy, reducing carbon and saving money.

Visit our website at www.weg.net to check the potential energy savings, CO_2 emissions reduction and return on investment with W22 Premium and Super Premium motors.

The W22 Super Premium Efficiency line from WEG is the most complete range of IE4 motors available to Industry today, designed to offer not only a significant reduction in energy consumption, but improved noise and vibration levels, higher reliability, easier maintenance and lower overall total cost of ownership.

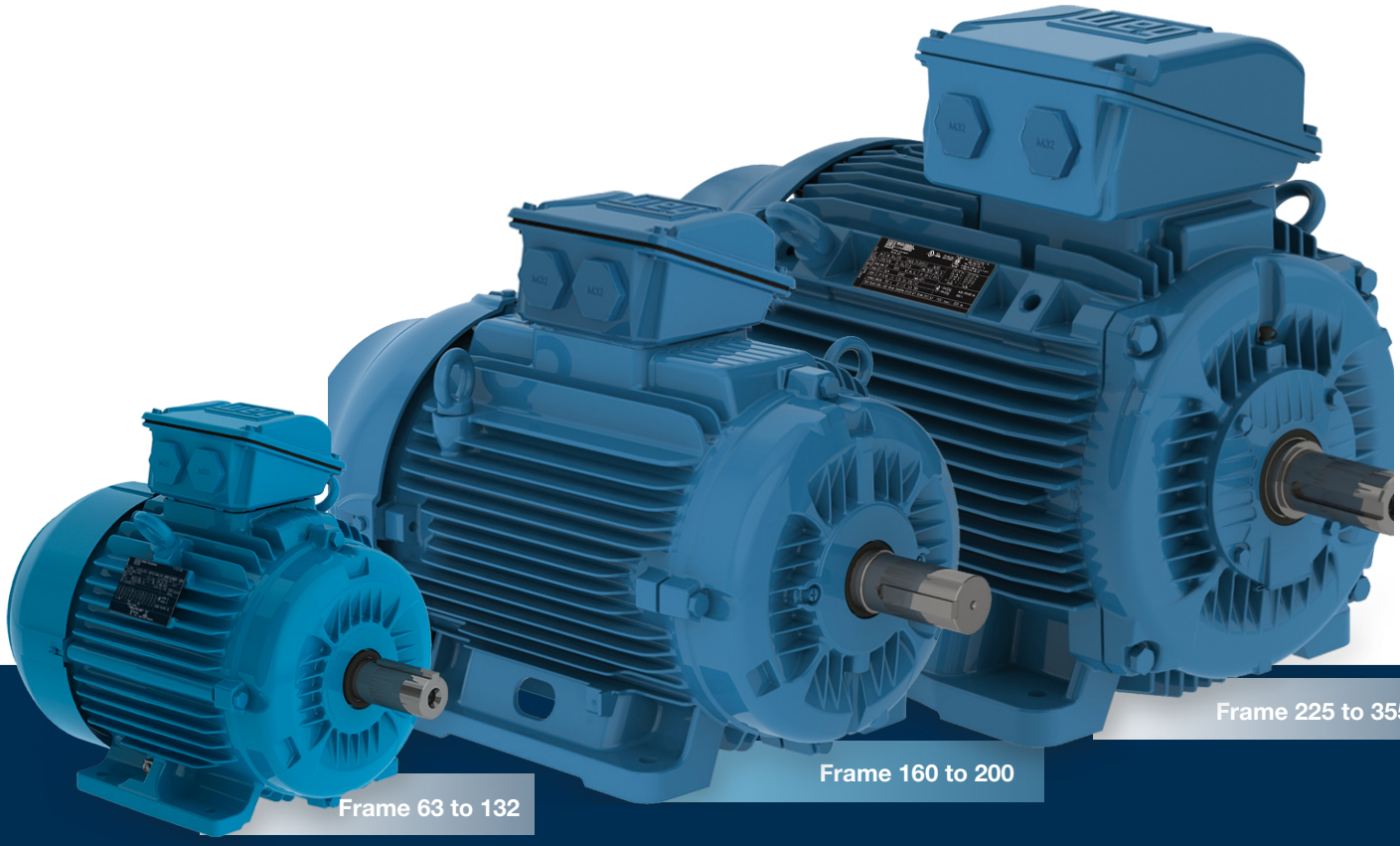

Driving efficiency and sustainability

Minimum Energy Performance Standards - Europe

Increasingly, the World seeks a path of sustainability and new ways to reduce energy consumption.
A significant percentage of the electrical energy utilized in facilities around the World is consumed by electric motors. Consequently, Governments around the World are implementing Energy Efficiency Programs in order to enforce the use of high efficiency motors.
Up until 2009, Europe did not have any specific regulations relating to the energy efficiency levels of electric motors. There existed only a voluntary agreement between Manufacturers from 1998 that determined the efficiency bands EFF1, EFF2 and EFF3.
However, in July 2009 Commission Regulation 640/2009 (implementing EuP Directive 2005/32/EC of July 2005) was adopted, which determined the ecodesign requirements relating to the scope, implementation dates and efficiency levels for electric motors and their use with variable speed drives. Also referred to as EU MEPS (European Minimum Energy Performance Standards), the efficiency levels for electric motors are determined in two IEC standards:
IEC/EN 60034-30-1, which details the efficiency classes in the form of 'IE' codes, and IEC/EN 60034-2-1 which defines the methods to be used to measure the efficiency.
The EU Regulation is mandatory within the European Economic Area, EEA (EU countries plus Norway, Iceland and Liechenstein), from 16th of June 2011. EU MEPS does not apply outside Europe.
Manufacturers can continue to supply IE1 non-CE marked motors to customers located in Europe for further shipment to non-European markets, but these must of course respect any applicable energy efficiency legislation for the destination country of use.
EU Regulations referred are implemented into UK law through the Statutory Instrument 2021 No 745
A new version of the EuP Directive (2009/125/EC) became effective on 21st October 2009 to expand the ecodesign requirements for Energy Related Products, whilst January 2014 saw the adoption of the Commission Regulation 4/2014 (amending the scope of 640/2009) which came into force with effect from 27th July 2014.

Scope

Regulation	EU 1781/2019 and UK Statutory Instrument 2021 No. 745				
Standard	IEC 60034-30-1				
Power supply system	Three - phase				Single - phase
Minimum energy performance	IE3	IE2	IE4	IE2	IE2
Minimum energy performance when is able to operate with inverter frequency	IE3	IE2	IE4	IE2	Not applicable
Output (kW)	0,75 up to 1000 kW	0,12 up to <0,75kW	75 up to 200 kW	0,12 up to 1000 kW	
Number of poles	2,4,6 and 8		2,4 and 6	2,4,6 and 8	
Voltage (V)	up to 1000 V				
Frequency (Hz)	50Hz or 60 Hz				
Service Duty	S1, S3 ≥ 80% or S6 ≥ 80%				
Cooling method	TEFC, TEBC, ODP, TEAO				
Degree of protection	IP 00 up to IP 66				
Area classification	Safety and hazardous area (Ex ec, Ex tc, Ex tb, Ex db, Ex dc, Ex db eb)		Safety area	Hazardous area (Ex eb)	Safety are
Altitude	Up to 4000 m				
Ambient temperature	-30 up to 60 ºC				
Required documentation	Self declaration				

However, the Regulation does not apply to:

a) Motors designed to operate wholly immersed in liquid.

b) Motors completely integrated into a product where its energy efficiency cannot be measured independently.

c) Motors designed to operate exclusively:

- at altitudes greater than 4,000 metres above sea level
- in ambient+ air temperatures exceeding 60 °C
- in maximum operating temperature above 400 °C
- where ambient air temperatures are below -30 °C (or 0 °C for water cooled motors)
- where water coolant temperatures are below 0 °C or above 32 °C at the inlet to the product
- in potentially explosive atmospheres defined in the Directive 94/9/EC

d) Brake motors

50Hz				
Output	IE1			
	Poles			
kW	2	4	6	8
0,12	45,0	50,0	38,3	31,0
0,18	52,8	57,0	45,5	38,0
0,20	54,6	58,5	47,6	39,7
0,25	58,2	61,5	52,1	43,4
0,37	63,9	66,0	59,7	49,7
0,40	64,9	66,8	61,1	50,9
0,55	69,0	70,0	65,8	56,1
0,75	72,1	72,1	70,0	61,2
1,1	75,0	75,0	72,9	66,5
1,5	77,2	77,2	75,2	70,2
2,2	79,7	79,7	77,7	74,2
3	81,5	81,5	79,7	77,0
4	83,1	83,1	81,4	79,2
5,5	84,7	84,7	83,1	81,4
7,5	86,0	86,0	84,7	83,1
11	87,6	87,6	86,4	85,0
15	88,7	88,7	87,7	86,2
18,5	89,3	89,3	88,6	86,9
22	89,9	89,9	89,2	87,4
30	90,7	90,7	90,2	88,3
37	91,2	91,2	90,8	88,8
45	91,7	91,7	91,4	89,2
55	92,1	92,1	91,9	89,7
75	92,7	92,7	92,6	90,3
90	93,0	93,0	92,9	90,7
110	93,3	93,3	93,3	91,1
132	93,5	93,5	93,5	91,5
160	93,8	93,8	93,8	91,9
200 up to 1000	94,0	94,0	94,0	92,5

50Hz				
Output	IE2			
	Poles			
kW	2	4	6	8
0,12	53,6	59,1	50,6	39,8
0,18	60,4	64,7	56,6	45,9
0,20	61,9	65,9	58,2	47,4
0,25	64,8	68,5	61,6	50,6
0,37	69,5	72,7	67,6	56,1
0,40	70,4	73,5	68,8	57,2
0,55	74,1	77,1	73,1	61,7
0,75	77,4	79,6	75,9	66,2
1,1	79,6	81,4	78,1	70,8
1,5	81,3	82,8	79,8	74,1
2,2	83,2	84,3	81,8	77,6
3	84,6	85,5	83,3	80,0
4	85,8	86,6	84,6	81,9
5,5	87,0	87,7	86,0	83,8
7,5	88,1	88,7	87,2	85,3
11	89,4	89,8	88,7	86,9
15	90,3	90,6	89,7	88,0
18,5	90,9	91,2	90,4	88,6
22	91,3	91,6	90,9	89,1
30	92,0	92,3	91,7	89,8
37	92,5	92,7	92,2	90,3
45	92,9	93,1	92,7	90,7
55	93,2	93,5	93,1	91,0
75	93,8	94,0	93,7	91,6
90	94,1	94,2	94,0	91,9
110	94,3	94,5	94,3	92,3
132	94,6	94,7	94,6	92,6
160	94,8	94,9	94,8	93,0
200 up to 1000	95,0	95,1	95,0	93,5

50Hz				
Output	IE3			
kW	2	4	6	8
0,12	60,8	64,8	57,7	50,7
0,18	65,9	69,9	63,9	58,7
0,20	67,2	71,1	65,4	60,6
0,25	69,7	73,5	68,6	64,1
0,37	73,8	77,3	73,5	69,3
0,40	74,6	78,0	74,4	70,1
0,55	77,8	80,8	77,2	73,0
0,75	80,7	82,5	78,9	75,0
1,1	82,7	84,1	81,0	77,7
1,5	84,2	85,3	82,5	79,7
2,2	85,9	86,7	84,3	81,9
3	87,1	87,7	85,6	83,5
4	88,1	88,6	86,8	84,8
5,5	89,2	89,6	88,0	86,2
7,5	90,1	90,4	89,1	87,3
11	91,2	91,4	90,3	88,6
15	91,9	92,1	91,2	89,6
18,5	92,4	92,6	91,7	90,1
22	92,7	93,0	92,2	90,6
30	93,3	93,6	92,9	91,3
37	93,7	93,9	93,3	91,8
45	94,0	94,2	93,7	92,2
55	94,3	94,6	94,1	92,5
75	94,7	95,0	94,6	93,1
90	95,0	95,2	94,9	93,4
110	95,2	95,4	95,1	93,7
132	95,4	95,6	95,4	94,0
160	95,6	95,8	95,6	94,3
200 up to 1000	95,8	96,0	95,8	94,6

50Hz				
Output	IE4			
	Poles			
kW	2	4	6	8
0,12	66,5	69,8	64,9	62,3
0,18	70,8	74,7	70,1	67,2
0,2	71,9	75,8	71,4	68,4
0,25	74,3	77,9	74,1	70,8
0,37	78,1	81,1	78,0	74,3
0,4	78,9	81,7	78,7	74,9
0,55	81,5	83,9	80,9	77,0
0,75	83,5	85,7	82,7	78,4
1,1	85,2	87,2	84,5	80,8
1,5	86,5	88,2	85,9	82,6
2,2	88,0	89,5	87,4	84,5
3	89,1	90,4	88,6	85,9
4	90,0	91,1	89,5	87,1
5,5	90,9	91,9	90,5	88,3
7,5	91,7	92,6	91,3	89,3
11	92,6	93,3	92,3	90,4
15	93,3	93,9	92,9	91,2
18,5	93,7	94,2	93,4	91,7
22	94,0	94,5	93,7	92,1
30	94,5	94,9	94,2	92,7
37	94,8	95,2	94,5	93,1
45	95,0	95,4	94,8	93,4
55	95,3	95,7	95,1	93,7
75	95,6	96,0	95,4	94,2
90	95,8	96,1	95,6	94,4
110	96,0	96,3	95,8	94,7
132	96,2	96,4	96,0	94,9
160	96,3	96,6	96,2	95,1
200	96,5	96,7	96,3	95,4
250	96,5	96,7	96,5	95,4
315 up to 1000	96,5	96,7	96,6	95,4

60Hz				
Output	IE1			
	Poles			
kW	2	4	6	8
0,12	57,5	62,0	48,0	36,0
0,18	62,0	66,0	52,5	40,0
0,25	64,0	68,0	57,5	50,5
0,37	70,0	70,0	62,0	57,5
0,55	72,0	74,0	66,0	59,5
0,75	74,0	77,0	72,0	64,0
1,1	78,5	79,0	75,0	73,5
1,5	81,0	81,5	77,0	77,0
2,2	81,5	83,0	78,5	78,0
3,7	84,5	85,0	83,5	80,0
5,5	86,0	87,0	85,0	84,0
7,5	87,5	87,5	86,0	85,0
11	87,5	88,5	89,0	87,5
15	88,5	89,5	89,5	88,5
18,5	89,5	90,5	90,2	88,5
22	89,5	91,0	91,0	90,2
30	90,2	91,7	91,7	90,2
37	91,5	92,4	91,7	91,0
45	91,7	93,0	91,7	91,0
55	92,4	93,0	92,1	91,5
75	93,0	93,2	93,0	92,0
90	93,0	93,2	93,0	92,5
110	93,0	93,5	94,1	92,5
150 up to 1 000	94,1	94,5	94,1	92,5

60Hz				
Output	IE2			
	Poles			
kW	2	4	6	8
0,12	59,5	64,0	50,5	40,0
0,18	64,0	68,0	55,0	46,0
0,25	68,0	70,0	59,5	52,0
0,37	72,0	72,0	64,0	58,0
0,55	74,0	75,5	68,0	62,0
0,75	75,5	78,0	73,0	66,0
1,1	82,5	84,0	85,5	75,5
1,5	84,0	84,0	86,5	82,5
2,2	85,5	87,5	87,5	84,0
3,7	87,5	87,5	87,5	85,5
5,5	88,5	89,5	89,5	85,5
7,5	89,5	89,5	89,5	88,5
11	90,2	91,0	90,2	88,5
15	90,2	91,0	90,2	89,5
18,5	91,0	92,4	91,7	89,5
22	91,0	92,4	91,7	91,0
30	91,7	93,0	93,0	91,0
37	92,4	93,0	93,0	91,7
45	93,0	93,6	93,6	91,7
55	93,0	94,1	93,6	93,0
75	93,6	94,5	94,1	93,0
90	94,5	94,5	94,1	93,6
110	94,5	95,0	95,0	93,6
150	95,0	95,0	95,0	93,6
185	95,4	95,0	95,0	93,6
220 up to 335	95,4	95,4	95,0	93,6
375 up to 1 000	95,4	95,8	95,0	94,1

60Hz				
Output	IE3			
	Poles			
kW	2	4	6	8
0,12	62,0	66,0	64,0	59,5
0,18	65,6	69,5	67,5	64,0
0,25	69,5	73,4	71,4	68,0
0,37	73,4	78,2	75,3	72,0
0,55	76,8	81,1	81,7	74,0
0,75	77,0	83,5	82,5	75,5
1,1	84,0	86,5	87,5	78,5
1,5	85,5	86,5	88,5	84,0
2,2	86,5	89,5	89,5	85,5
3,7	88,5	89,5	89,5	86,5
5,5	89,5	91,7	91,0	86,5
7,5	90,2	91,7	91,0	89,5
11	91,0	92,4	91,7	89,5
15	91,0	93,0	91,7	90,2
18,5	91,7	93,6	93,0	90,2
22	91,7	93,6	93,0	91,7
30	92,4	94,1	94,1	91,7
37	93,0	94,5	94,1	92,4
45	93,6	95,0	94,5	92,4
55	93,6	95,4	94,5	93,6
75	94,1	95,4	95,0	93,6
90	95,0	95,4	95,0	94,1
110	95,0	95,8	95,8	94,1
150	95,4	96,2	95,8	94,5
185 up to 1 000	95,8	96,2	95,8	95,0

60Hz				
Output	IE4			
	Poles			
kW	2	4	6	8
0,12	66,0	70,0	68,0	64,0
0,18	70,0	74,0	72,0	68,0
0,25	74,0	77,0	75,5	72,0
0,37	77,0	81,5	78,5	75,5
0,55	80,0	84,0	82,5	77,0
0,75	82,5	85,5	84,0	78,5
1,1	85,5	87,5	88,5	81,5
1,5	86,5	88,5	89,5	85,5
2,2	88,5	91,0	90,2	87,5
3,7	89,5	91,0	90,2	88,5
5,5	90,2	92,4	91,7	88,5
7,5	91,7	92,4	92,4	91,0
11	92,4	93,6	93,0	91,0
15	92,4	94,1	93,0	91,7
18,5	93,0	94,5	94,1	91,7
22	93,0	94,5	94,1	93,0
30	93,6	95,0	95,0	93,0
37	94,1	95,4	95,0	93,6
45	94,5	95,4	95,4	93,6
55	94,5	95,8	95,4	94,5
75	95,0	96,2	95,8	94,5
90	95,4	96,2	95,8	95,0
110	95,4	96,2	96,2	95,0
150	95,8	96,5	96,2	95,4
185	96,2	96,5	96,2	95,4
220	96,2	96,8	96,5	95,4
250 up to 1 000	96,2	96,8	96,5	95,8

Table 1 - Minimum efficiency levels (according to IEC 60034-30-1:2014).

WEG can support the movement towards these high efficiency levels by offering a comprehensive range of products meeting the IE1, IE2, IE3 and IE4 criteria detailed above. Additionally our variable speed drives are perfectly matched to our motors, affording you the most reliable package of motor / drive products in industry.
To learn more about WEG, our products and the new Global Directives, go to www.weg.net.

INDEX

1. Versions Available....8
2. Standards....8
3. Construction Details....8
3.1. Frame....8
3.2. Eyebolts....8
3.3. Points for Vibration Monitoring....9
3.4. Earth Terminals....9
3.5. Terminal Box....9
3.6. Power Supply Connection Leads....10
3.7. Accessory Connection Leads....10
3.8. Endshields....10
3.9. Drains....11
3.10. Fan Cover....11
3.11. Nameplate....11
4. Cooling System and Noise Level / Vibration Level / Impact Resistance....12
4.1. Cooling System....12
4.2. Noise Level....12
4.3. Vibration Level....12
4.4. Impact Resistance....13
5. Shaft / Bearings....13
5.1. Shaft....13
5.2. Bearings....13
5.2.1. Permissible Loads....14
5.2.2. Bearing Monitoring....16
6. Mounting Forms....16
7. Degree of Protection / Sealing System / Painting....17
7.1. Degree of Protection....17
7.2. Sealing System....17
7.3. Painting....17
7.3.1. Tropicalized Painting....17
8. Voltage / Frequency....18
9. Overload Capacity....18
10. Ambient and Altitude....18
11. Insulation & Temperature Rise....18
11.1. Space Heaters....18

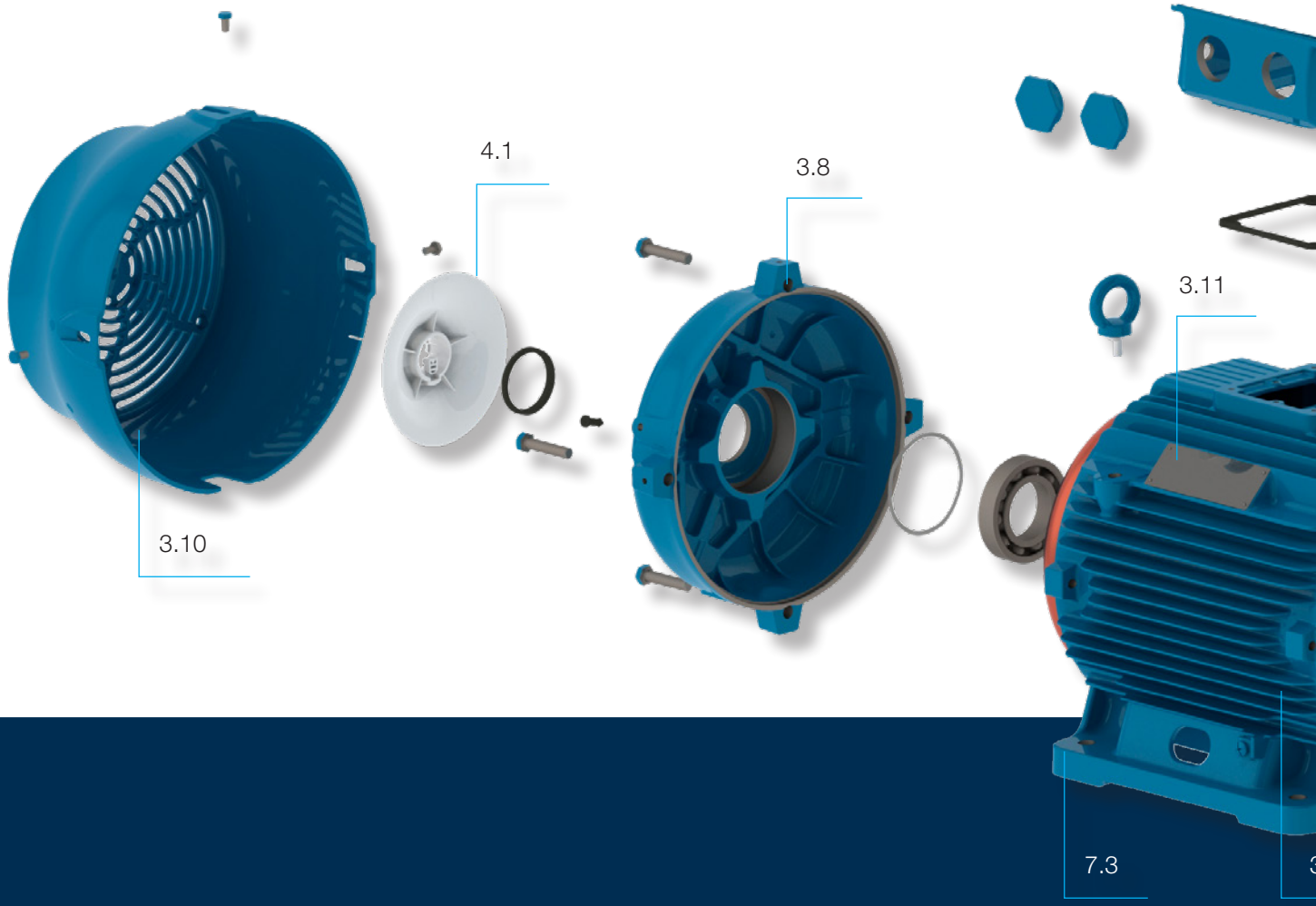

12. Motor Protections.....19
12.1. Protection Based on Operating Temperature.....19
12.1.1. Pt-100.....19
12.1.2. Thermistor (PTC).....19
12.1.3. Bimetallic Thermal Protectors.....19
12.2. Protection Based on Operating Current.....19
13. Variable Speed Drive Application.....20
13.1. Considerations Regarding Voltage Spikes and the Insulation System.....20
13.2. Influence of the VSD on the Motor Temperature...20
13.2.1. Torque Derating Criteria.....20
13.2.2. Constant Flux Condition.....20
13.2.3. Optimal Flux Condition.....20
13.3. Considerations Regarding Bearing Currents.....21
13.4. Forced Ventilation.....21
13.5. Encoders.....21
14. Tolerances for Electrical Data.....21
15. Construction Features.....22
16. Optional Features.....24
17. Electrical Data.....30
18. Mechanical Data.....50
19. Terminal Box Drawings.....55
20. Drip Cover Data.....56
21. External Motor Dimensions with Forced Ventilation.....56
22. Silencer.....56
23. Leveling screws and dowel pins.....57
24. Packaging.....57
24.1. Frames 63 to 132.....57
25. Frames 160 to 355A/B.....57
26. Spare Parts.....58
26.1. General Information.....58
26.2. Spare Parts Available 132-200.....60
26.3. Spare Parts Available 225 - 355.....62

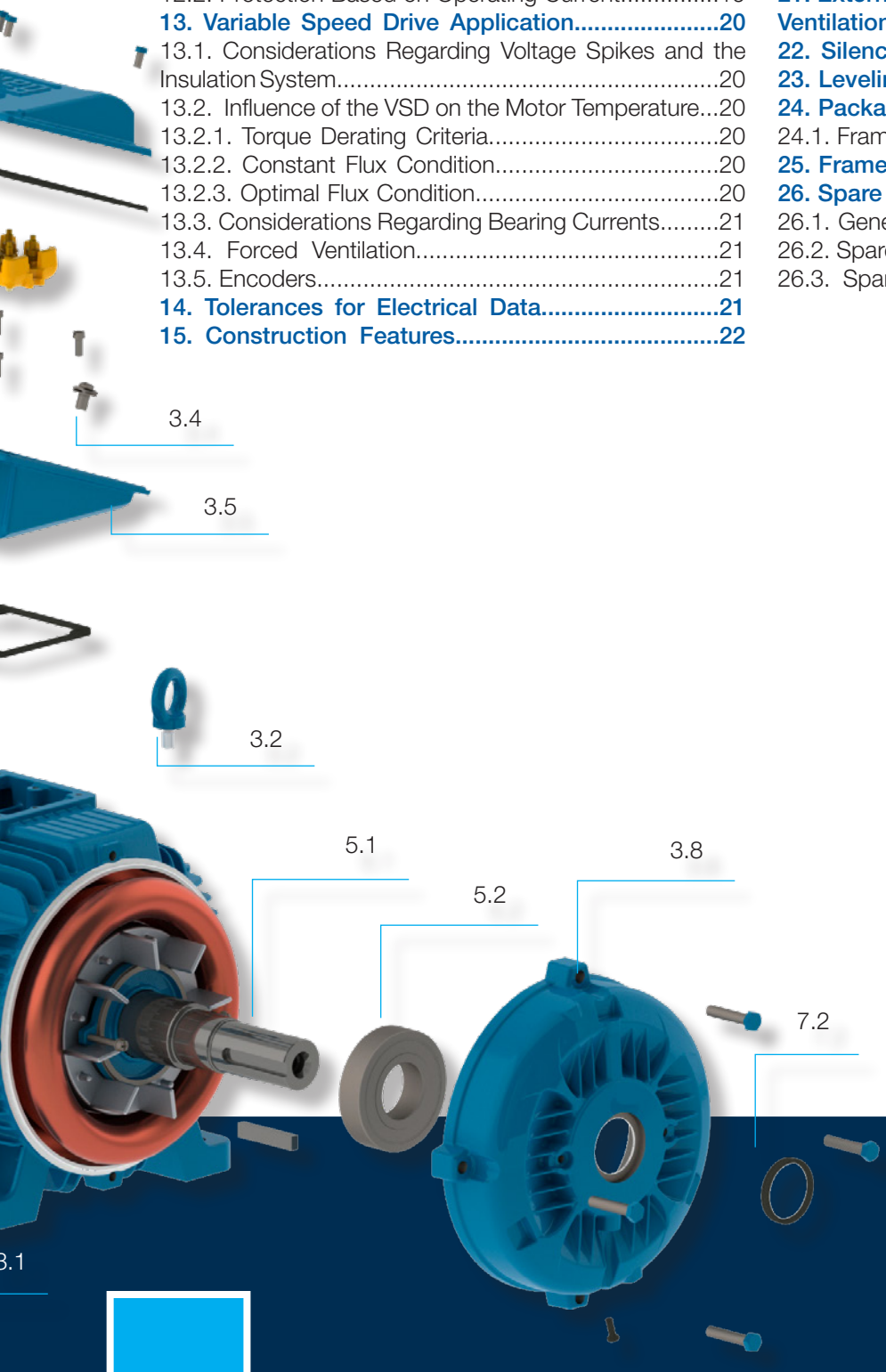

Driving efficiency and sustainability

1. Versions Available

Meeting the legislative requirements of the European Market, W22 motors are available in three versions in accordance with IEC 60034-30-1:2014: Premium (IE3), Super Premium (IE4) or Ultra Premium (IE5) motors.
Efficiency values for W22 motors are prepared in accordance with the test standard IEC 60034-2-1:2014, with stray load losses determined directly by the summation of losses.
The output versus frame ratio for all W22 motors follows the EN 50347 standard, thus allowing direct replacement of existing lower efficiency motors with Premium (IE3), Super Premium (IE4) or Ultra Premium (IE5) motors.
A further characteristic of the W22 electrical design is that it was conceived in such way that its efficiency remains practically constant in the 75% to 100% load range. Therefore, even when the motor is not running at full load its efficiency is not affected (see figure 1).

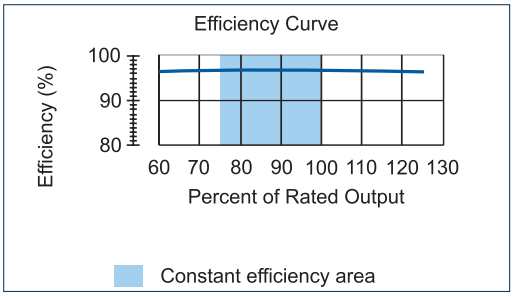

Figure 1 - Typical efficiency curve of W22 line

2. Standards

W22 motors meet the requirements and regulations of the latest versions of the following International Standards:
IEC 60034-1 Rotating electrical machines - Part 1: Rating and performance.
IEC 60034-2-1 Rotating electrical machines - Part 2-1: Standard methods for determining losses and efficiency from tests (excluding machines for traction vehicles).
IEC 60034-5 Rotating electrical machines - Part 5: Degrees of protection provided by the integral design of rotating electrical machines (IP code) - classification.
IEC 60034-6 Rotating electrical machines - Part 6: Methods of cooling (IC code).
IEC 60034-7 Rotating electrical machines - Part 7: Classification of types of enclosures and mounting arrangements (IM code).
IEC 60034-8 Rotating electrical machines - Part 8: Terminal markings and direction of rotation.
IEC 60034-9 Rotating electrical machines - Part 9: Noise limits.
IEC 60034-11-1 Rotating electrical machines - Part 11-1: Thermal protection.
IEC 60034-12 Rotating electrical machines - Part 12: Starting performance of single-speed three-phase cage induction motors.
IEC 60034-14 Rotating electrical machines - Part 14: Mechanical vibration of certain machines - Limits of vibration.
IEC 60034-30-1 Rotating electrical machines - Part 30: Efficiency classes for single-speed three-phase cage induction motors.
IEC 60072-1 Dimensions and output series for rotating electrical machines - Part 1: Frame numbers 56 to 400 and flange numbers 55 to 1080.
EN 50347 General purpose three-phase induction motors having standard dimensions and outputs - frame numbers 56 to 315 and flange numbers 65 to 740.

3. Construction Details

The information included in this technical catalogue refers to the standard construction features and most common variations for W22 Low Voltage General Purpose Motors in frame sizes from IEC 63 to 355A/B.
W22 motors for special and/or customized applications are available on request. For more information, please, contact your WEG office or distributor.

3.1. Frame

The W22 frame (figure 2) is manufactured in FC-200 (EN GJL 200) cast iron providing high levels of mechanical strength to cater for the most demanding applications. The cooling fins are designed to minimize the accumulation of liquids and dust on the motor.

Figure 2 - W22 Frame

The motor feet are completely solid for optimal mechanical strength (figure 3), allowing easier alignment and installation.

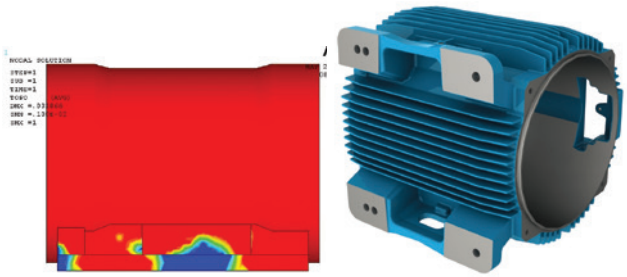

Figure 3 - Solid feet

3.2. Eyebolts

Eyebolts are provided as standard from frame size 100L. The positions of the eyebolts are shown in the table 2:

Number of eyebolts	Description
1	Frames 100L to 200L Motors with feet and with side mounted terminal box
2	Frames 100L to 200L Motors with feet and with top mounted terminal box
2	Frames 100L to 200L - Motors without feet and with C or FF flange
2	Frames 225S/M to 355A/B - Motors with feet and side or top mounted terminal box. These motors have four threaded holes in the upper part of the frame for fastening of the eyebolts (figure 5)
2	Frames 225S/M to 355A/B - Motors without feet and with C or FF flange. These motors have four threaded holes in the upper part of the frame for fastening of the eyebolts and two more threaded holes in the bottom part

Table 2 - Eyebolts

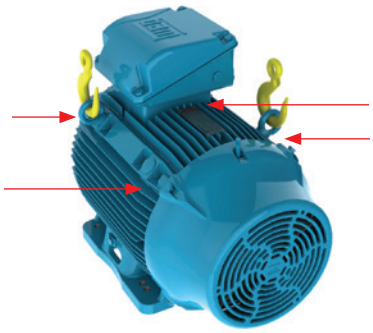

Figure 4 - Motor with four threaded holes for fastening of the eyebolts

3.3. Points for Vibration Monitoring

To allow easy maintenance, specifically vibration testing, the 160 to 355 frames are designed with flat areas on both ends for better placement of accelerometers.
These flat areas are provided in both vertical and horizontal planes. As an option M8 threads for SPM accelerometers can be supplied. (Figure 5)

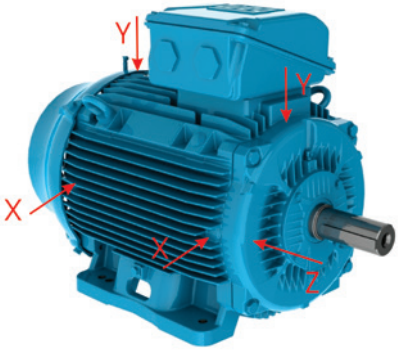

Front side

Figure 5 -Flat surfaces for vibration monitoring on the top, front and side.

3.4. Earth Terminals

All frames from 63 to 355A/B are provided with an earth terminal located inside the terminal box (see figure 6).
Motors in frames 225S/M to 355A/B are also fitted with an earth terminal on the frame. It is located on the same side of the main terminal box cable entry and is responsible to equalize electrical potential and provide greater safety for operators. Capable of terminating cables from 25 mm^2 to 185 mm^2.

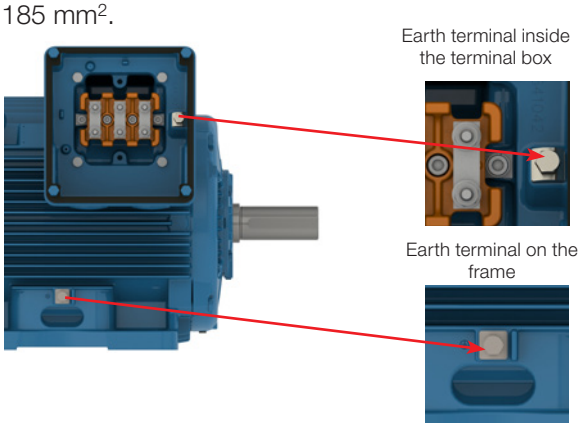

Figure 6 -Earth terminal inside the terminal box and on the frame

Optionally, an external earth terminal can be provided for motors in frame sizes 63 to 200, and, for frame sizes 80 to 355A/B a second external earth terminal as indicated in figure 7.

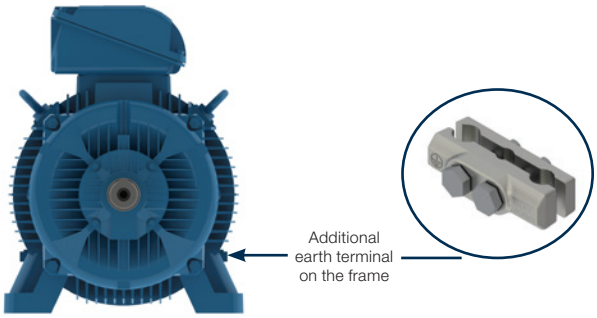

Figure 7 -Additional earth terminal position on the frame

3.5. Terminal Box

The terminal box of W22 motors is produced in FC-200 (EN GJL 200) cast iron, which is the same material used for the frame and endshields. It is diagonally split for easier handling of leads and connections.
For the frame size range 63 to 200 the terminal box position is centralized on the motor frame and can be supplied in two configurations - top (standard) or left / right side (optional). A motor with a side mounted terminal box (B3R or B3L) can have the terminal box position located on the opposite side through modification. For frame sizes 225S/M to 355A/B the terminal box is positioned towards the drive end of the motor and on top as standard.
This arrangement allows improvement of the airflow over the cooling fins, thus reducing motor operating temperatures.
Terminal box position on either the left or right hand side of the motor is possible through the use of an adaptor (see figure 8).

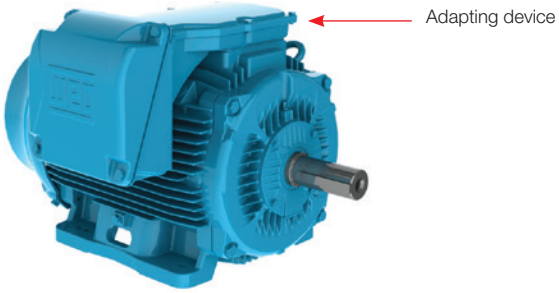

Figure 8 - Terminal box mounted on the left side viewing from drive end shaft

When supplied from the factory with a side mounted terminal box arrangement, this can be positioned on the opposite side simply by rotating the adaptor.
Similarly, by removing the adaptor and adjusting the length of the motor leads, the terminal box can be positioned on top of the motor.
The flexibility of terminal box positions on the W22 motor offered by the adaptor can be seen in figure 9.

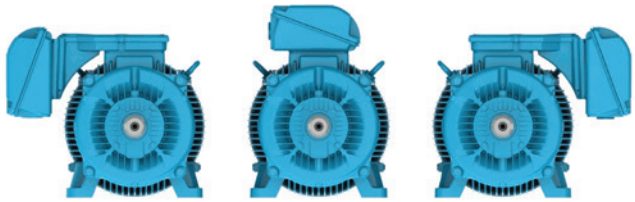

Figure 9 -Terminal box mounted on both sides and on top (versatility)

Conversely, factory supplied motors with the terminal box position on top can be modified to side mounting by fitting the adaptor and extending the motor leads.

Note: For all terminal box position modifications please contact WEG or your local WEG service centre.

For all frames, the terminal box can be rotated in 90° increments. Motors in IEC frame sizes 315L, 355M/L and 355A/B are supplied as standard with removable cast iron cable gland plates. As an option, the gland plates can be supplied undrilled.
Motors are supplied with plastic threaded plugs in the cable entries for protection against ingress of solid objects during transport.
In order to guarantee the degree of protection, cable glands must comply with at least the same degree of protection as that indicated on the motor nameplate. Lack of compliance with such detail can invalidate the motor warranty. If required, please contact the WEG Service Area for further advice.

3.6. Power Supply Connection Leads

Motor power supply leads are marked in accordance with IEC 60034-8 and are connected to a terminal block made from a polyester based resin BMC (Bulk Moulding Compound), duly reinforced with fibre glass (see figure 10).

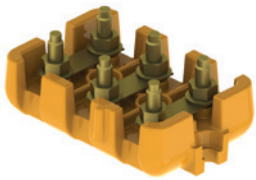

Figure 10 -BMC terminal block

Motors in frame size 355A/B are provided with a staggered terminal block arrangement, as indicated in figure 11.

Figure 11 -355A/B staggered terminal block

3.7. Accessory Connection Leads

Accessory terminals are assembled onto connectors whenever the motor is supplied with a terminal block. They may be assembled inside the main power terminal box or in a separate accessory terminal box (figure 12). Whether the accessory terminals are assembled inside the main power or a separate terminal box, an M20x1,5 threaded hole is provided for fitting of cable glands for the incoming connection leads.
In the Terminal Box Drawings Section of this technical catalogue it is possible to check the permissible number of connectors which may be assembled inside the main power and accessory terminal boxes.

Figure 12 -Accessory terminal box attached to power terminal box

For all frame sizes, there is also the option of providing a dedicated terminal box for the connection of space heaters, or two separate accessory terminal boxes, as shown in figure 13.

Figure 13 -Two accessory terminal boxes attached to power terminal box

3.8. Endshields

The drive end shield (figure 14) is designed with fins for improved thermal heat dissipation, to ensure lower bearing operating temperatures, resulting in extended lubrication intervals.
For the frames 225S/M to 355A/B, where ventilation is critical for thermal performance of the motor, the endshield fastening screws are located in such a way so as not to obstruct the airflow across any cooling fin, thus contributing to better thermal exchange.

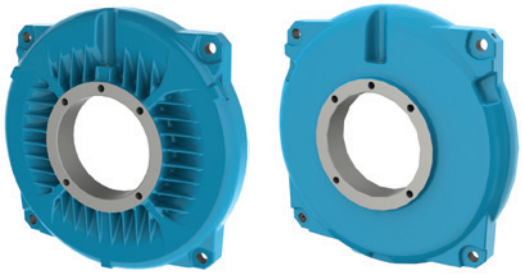

Figure 14 - Drive and non-drive endshields

3.9. Drains

W22 has automatic drain plugs with degree of protection IP66 (see figure 15) which do not require human intervention to open the plug and avoid accumulation of condensed liquids into the motor.

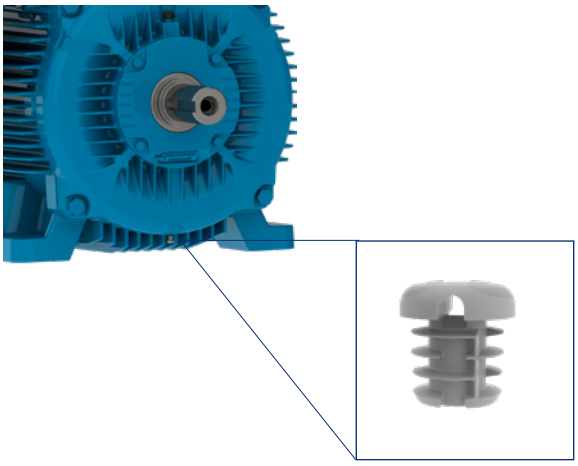

Figure 15 - Detail of the drain plug position on drive endshield.

3.10. Fan Cover

The fan cover is made of steel for frames 63 to 132 and FC-200 (EN GJL 200) cast iron for frames 160 to 355. The cast iron fan covers have an aerodynamic design, which results in a significant reduction in noise level and optimized airflow between frame fins for heat exchange improvement. Figure 16 shows the aerodynamic design of the cast iron fan cover.

Figure 16 -Fan cover

3.11. Nameplate

The nameplate details information relating to the construction and performance characteristics of the motor. It is also necessary to indicate on the nameplate the IE code and nominal efficiency of the motor at full load (and 3/4 and 1/2 load where space permits), as required by IEC 60034-30-1.

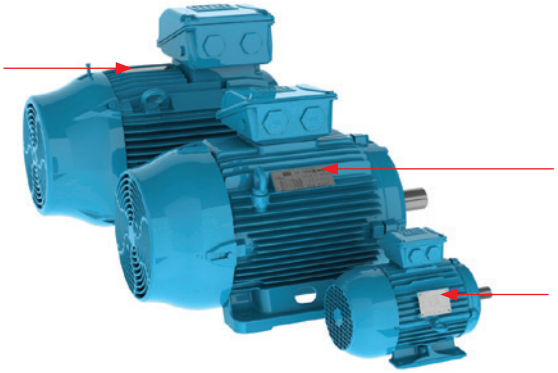

Figure 17 - Nameplate position of W22 motors

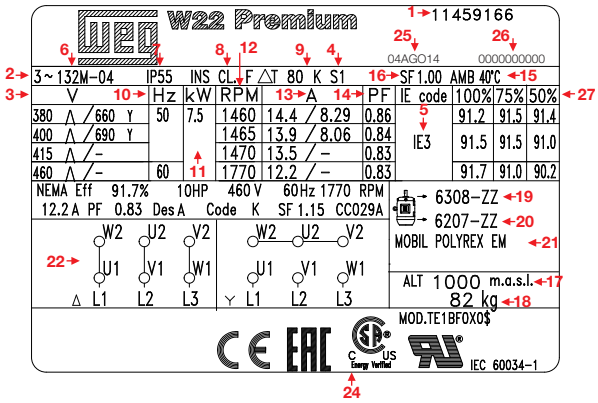

Figure 18 -Nameplate layout for frames 63 to 132

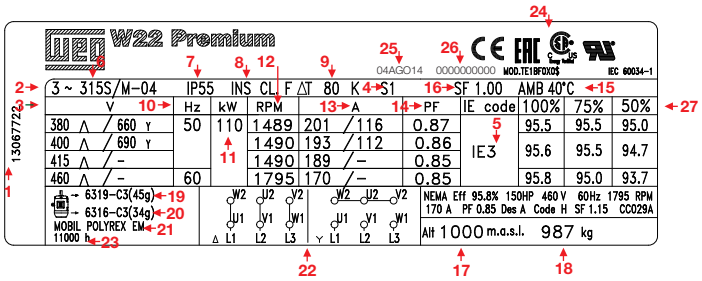

Figure 19 -Nameplate layout for frames 160 to 355

1 - Motor code
2 - Number of phases
3 - Rated operating voltage
4 - Service duty
5 - Efficiency Code - IE
6 - Frame size
7 - Degree of protection
8 - Insulation class
9 - Temperature rise
10 - Frequency
11 - Motor rated power
12 - Full load speed (rpm)
13 - Rated operating current
14 - Power factor
15 - Ambient temperature
16 - Service factor
17 - Altitude
18 - Motor weight
19 - Drive end bearing type and amount of grease (where applicable)
20 - Non-drive end bearing type and amount of grease (where applicable)
21 - Type of grease for bearings
22 - Connection diagram
23 - Relubrication intervals in hours
24 - Certification labels
25 - Manufacturing date
26 - Serial number
27 - Partial load efficiencies

4. Cooling System and Noise Level / Vibration Level / Impact Resistance

4.1. Cooling System

The W22 standard motors are totally enclosed fan cooled (TEFC - IC 411), as per IEC 60034-6 (figure 20).
Non-ventilated versions (TENV - IC 410), air over (TEAO - IC 418) and motors with forced ventilation (TEBC - IC416) are available on request. Further information regarding the TEBC - IC 416 option can be found in Section 13 - Variable speed drive application.

Figure 20 -Cooling system

The cooling system (fan, non drive endshield and fan cover) is designed to minimize the noise level and improve thermal efficiency (figure 21).

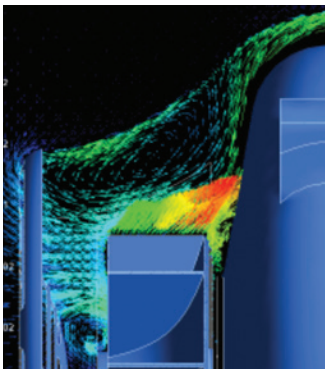

Figure 21 -Cooling system operation

4.2. Noise Level

W22 motors comply with IEC 60034-9 Standard and the corresponding sound pressure levels. Tables 3 and 4 show sound pressure levels in dB(A) which are obtained upon tests at 50 Hz and 60 Hz.

IEC 50 Hz				
Frame	Sound pressure level - dB(A) at 1 meter			
	2 poles	4 poles	6 poles	8 poles
63	52	44	43	-
71	56	43	43	41
80	59	44	43	42
90	64/ 62(*)	49	45	43
100	67	53	44	50
112	64	56	48	46
132	68/ 67(*)	60/ 56(*)	52	48
160	67	61	56	51
180	67	61	56	51
200	72/ 69(*)	65/ 63(*)	60	53
225	75/ 74(*)	66/ 63(*)	61	56
250	75/ 74(*)	66/ 64(*)	61	56
280	77	69	65	59
315S/M	77	71	67	61
315 L	78	74/ 73(*)	68	61
355M/L	80	76/ 74(*)	73	70
355A/B	83	76	73	70

Table 3 - Sound pressure levels for 50 Hz motors
(*) Values for IE3 and IE4 motors.

IEC 60 Hz				
Frame	Sound pressure level - dB(A) at 1 meter			
	2 poles	4 poles	6 poles	8 poles
63	56	48	47	-
71	60	47	47	45
80	62	48	47	46
90	68	51	49	47
100	71	54	48	54
112	69	58	52	50
132	72	61	55	52
160	72	64	59	54
180	72	64	59	54
200	76/ 74(*)	68/ 66(*)	62	56
225	80/ 79(*)	70/ 67(*)	64	60
250	80/ 79(*)	70/ 68(*)	64	60
280	81	73	69	63
315S/M	81	75	70	64
315L	82	79/ 77(*)	71	64
355M/L	84	81/ 78(*)	77	75
355A/B	89	81	77	75

Table 4 -Sound pressure levels for 60 Hz motors

(*) Values for IE3 and IE4 motors.

The noise level values shown in tables 3 and 4 are taken at 1 metre at no load. Under load the IEC 60034-9 Standard foresees an increase of the sound pressure levels as shown in table 5.

Frame (mm)	2 poles	4 poles	6 poles	8 poles
90 ≤ H ≤ 160	2	5	7	8
180 ≤ H ≤ 200	2	4	6	7
225 ≤ H ≤ 280	2	3	6	7
H = 315	2	3	5	6
355 ≤ H	2	2	4	5

Table 5 -Maximum expected increase of sound pressure level for loaded motors.

Note: These values refer to operating frequencies of 50 Hz and 60 Hz.
The overall noise level can be reduced by up to 2 dB (A) with the installation of a drip cover.

4.3. Vibration Level

Vibration of an electrical machine is closely related to its assembly on the application and, thus, it is generally desirable to perform vibration measurements under installation and operational conditions. However, to allow evaluation of the vibration generated by the electrical machine itself in a way to allow reproducibility of the tests and the obtaining of comparative measurements, it is necessary to perform such measurements with the machine uncoupled, under controlled test conditions. The test conditions and vibration limits described here are those found in IEC 60034-14.
The severity of vibration is the maximum value of vibration found among all the recommended measurement points and directions. Table below, indicates the recommended admissible values of vibration severity under IEC standard 60034-14 for the frames IEC 56 to 400, for degrees of vibration A and B.
W22 motors (> frame 80, 2P and > frame 71, 4P and up) are dynamically balanced with half key and the standard version meets the vibration levels of Grade A (without special vibration requirements) described in IEC 60034-14 Standard. As an option, motors can be supplied in conformance with vibration of Grade B. The RMS speed and vibration levels in mm/s of Grades A and B are shown in table 6.

Vibration	Frame	56 ≤ H ≤ 132	132 < H ≤ 280	H > 280
	Assembly	Vibration speed RMS (mm/s)	Vibration speed RMS (mm/s)	Vibration speed RMS (mm/s)
Grade A	Free suspension	1,6	2,2	2,8
Grade B	Free suspension	0,7	1,1	1,8

Table 6 - Speed and vibration levels

4.4. Impact Resistance

The W22 motor complies with impact level IK08 (mechanical impact of 5J) as defined in EN 62262:2002 - Degrees of protection provided by enclosures for electrical equipment against external mechanical impacts (IK code) - therefore ensuring superior mechanical strength for the most demanding applications.

5. Shaft / Bearings

5.1. Shaft

The shaft steel material for W22 standard motors is AISI 1040/45, in frames IEC 63 to 315S/M, and AISI 4140 for frames 315L, 355M/L and 355A/B. When supplied with roller bearings, the shaft material must be AISI 4140. Information regarding the maximum allowable radial and axial loads on shaft ends is given in tables 8, 9 and 10. Important: when equipped with a roller bearing, it is necessary to lock the non-drive end bearing which obliges replacement of the non-drive end bearing cap.

Shafts of W22 motors are supplied with an open profile keyway, with a threaded centre hole, and can optionally be provided with a second shaft end. Dimensions of motor shafts can be found in Section 18 - Mechanical Data. For highly corrosive environments, W22 motors may also be supplied with AISI 316 or AISI 420 stainless steel shafts.

Note: 2 pole motors will have as an option only the shaft end in stainless steel AISI 316.

5.2. Bearings

W22 motors are supplied with deep groove ball bearings as standard (figure 22). Optionally, for frame sizes 132 and above, NU series roller bearings can be fitted to motors intended for heavy duty applications where high radial loads may occur e.g. pulley and belt drives.

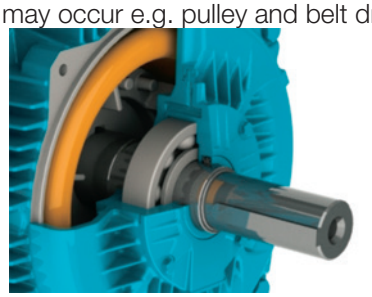

Figure 22 -Ball bearing view

The nominal bearing life L10h is 20.000 or 40.000 hours in conformance with maximum radial and axial loads as described in tables 8, 9 and 10. When direct coupled to the load (without axial or radial thrusts), the L10h bearing life can be extended to 50.000* hours.

** For regreasable motors. Other configurations contact WEG.*

In standard configuration, with ball bearings, the drive end bearing is locked axially from frame 160. To compensate for any axial movement the motors are fitted with pre-load washers for frames 63 to 200 and with pre-load springs for frames 225 to 355. When provided with roller bearings, the non-drive end bearing is locked and the axial movement is compensated by the axial play of the front roller bearing. Minimum and maximum admissible radial loads for roller bearings are shown in table 10 on page 14.

The lifetime of the bearing is dependent on its type and size, the radial and axial mechanical loads it is submitted to, operating conditions (environment, temperature, mounting orientation), rotational speed and grease life. Therefore, bearing lifetime is closely related to its correct use, maintenance and lubrication. Respecting the quantity of grease and lubrication intervals allows bearings to reach the indicated lifetime. W22 motors in IEC frames 225S/M and above are provided as standard with grease fittings in each endshield to permit the relubrication of the bearings (optional for frames 90 to 200). The quantity of grease and lubrication intervals are stamped on the motor nameplate. The lubrication intervals are shown in tables 13 and 14 on page 16. It must be emphasized that excessive lubrication, i.e. a quantity of grease greater than that recommended on the motor nameplate, can result in the increase of bearing temperatures leading to reduced operating hours.

Note:

1. L10h lifetime means that at least 90% of the bearings submitted to the maximum indicated loads will reach the number of hours indicated. The maximum admissible radial and axial loads for the standard configuration are shown in tables 8,9,10,11 and 12. The values of the maximum radial load consider axial load as nil. The values of the maximum axial load consider radial load as nil. For bearing lifetimes with combined axial and radial loads condition contact WEG.
2. The radial force value Fr usually results from information recommended in the catalogues of pulley / belt manufacturers. When this information is not available, the force Fr, under operation, can be calculated based on the output power, on coupling design characteristics with pulleys and belts and on the type of application. So we have:

$$Fr = \frac{19{,}1 \times 10^6 \times P_n}{n_n \times dp} \times ka \text{ (N)}$$

Where:

Fr is the radial force caused by pulley and belt coupling [N];

Pn is the motor rated power [kW];

n_n is the motor rated speed per minute [rpm];

dp is the pitch diameter of the drive pulley [mm];

ka is a factor that depends on belt tension and type of application (table 7).

	Groups and basic types of application	ka factor of the application	
		V belts	Plane belts
1	Fans and blowers, centrifugal pumps, winding machines, compressors, machine tools with outputs up to 22 kW (30 HP)	2,0	3,1
2	Fans and blowers, centrifugal pumps, winding machines, compressors, machine tools with outputs higher than 22 kW (30 HP)	2,4	3,3
3	Presses, vibrating screens, piston and screw compressors, pulverisers, helicoidal conveyors, woodworking machines, textile machines, kneading machines, ceramic machines, pulp and paper industrial grinders (for all power range).	2,7	3,4
4	Overhead cranes, hammer mills, metal laminators, conveyors, gyratory crushers, jaw crushers, cone crushers, cage mills, ball mills, rubber mixers, mining machines, shredders (for all power range).	3,0	3,7

Table 7 - ka factor

Important:

1 - Special applications

Motor operation under adverse operating conditions, such as higher ambient temperatures and altitudes or abnormal axial / radial loads, may require specific lubrication measures and alternative relubrication intervals to those indicated in the tables provided within this technical catalogue.

2 - Roller bearings

Roller bearings require a minimum radial load so as to ensure correct operation. They are not recommended for direct coupling arrangements, or for use on 2 pole motors.

3 - Frequency inverter driven motors

Bearing life may be reduced when a motor is driven by a frequency drive at speeds above nominal. Speed itself is one of the factors taken into consideration when determining motor bearing life.

4 - Motors with modified mounting configurations

For motors supplied with horizontal mounting but working vertically, lubrication intervals must be reduced by half.

5 - Figures for radial thrusts

The figures given in the tables below for radial thrusts take into consideration the point upon which the load is applied, either at the centre of the shaft (L/2) or at the end of the shaft (L), figure 23.

Note: On motors with second shaft end, refer to WEG for details of the maximum permissible axial and radial loads.

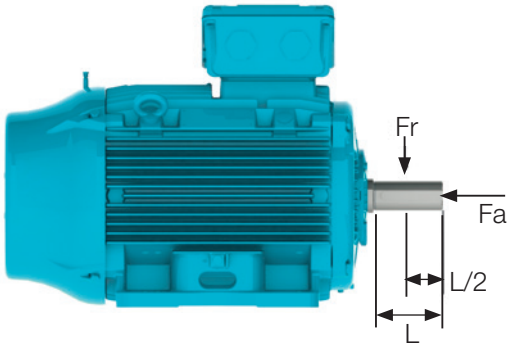

Figure 23 -Radial and axial thrust on motor shaft

5.2.1. PermissibleLoads

Radial Thrust - Ball Bearings

Maximum permissible radial thrust - 50 Hz - Fr in (kN) 20.000 hours								
Frame	2 poles		4 poles		6 poles		8 poles	
	L	L/2	L	L/2	L	L/2	L	L/2
63	0,3	0,4	0,3	0,4	0,3	0,4	0,3	0,4
71	0,5	0,5	0,5	0,6	0,5	0,6	0,6	0,7
80	0,6	0,6	0,7	0,7	0,7	0,8	0,8	1,0
90	0,6	0,7	0,7	0,8	0,8	0,9	0,9	1,0
100	0,9	1,0	1,0	1,1	1,2	1,3	1,3	1,4
112	1,2	1,3	1,4	1,5	1,6	1,8	1,7	1,9
132	1,8	2,0	2,2	2,4	2,4	2,7	2,6	2,9
160	2,3	2,6	2,6	2,9	2,7	3,3	2,7	3,7
180	3,1	3,5	3,6	4,0	4,2	4,7	4,2	5,2
200	3,7	4,0	4,2	4,7	4,9	5,4	5,7	6,2
225	5,1	5,5	5,2	6,3	5,3	7,0	5,7	8,1
250	4,9	5,3	5,2	5,7	6,5	7,1	6,0	8,2
280	5,0	5,4	6,7	7,2	7,8	8,4	8,7	9,4
315S/M	4,3	4,7	7,0	7,7	8,1	8,8	9,0	9,8
315L	4,6	5,0	4,0	7,3	6,2	8,2	9,1	9,8
355M/L	4,8	5,1	8,5	9,3	9,6	10,4	11,6	12,6
355A/B	4,5	4,7	5,1	7,4	7,4	8,0	6,9	10,6

Table 8 -Maximum permissible radial thrusts for ball bearings (horizontal mounting)

Radial Thrust - Ball Bearings

Maximum permissible radial thrust - 50 Hz - Fr in (kN) 40.000 hours								
Frame	2 poles		4 poles		6 poles		8 poles	
	L	L/2	L	L/2	L	L/2	L	L/2
63	0,2	0,2	0,3	0,3	0,3	0,4	0,3	0,4
71	0,3	0,3	0,4	0,4	0,5	0,5	0,5	0,6
80	0,5	0,5	0,5	0,6	0,6	0,6	0,7	0,7
90	0,5	0,5	0,5	0,6	0,6	0,7	0,7	0,8
100	0,7	0,7	0,7	0,8	0,9	1,0	1,0	1,1
112	0,9	1,0	1,0	1,1	1,2	1,4	1,3	1,4
132	1,4	1,6	1,6	1,8	1,8	2,0	2,0	2,2
160	1,8	2,0	1,9	2,1	2,2	2,4	2,5	2,7
180	2,4	2,7	2,7	3,0	3,2	3,5	3,6	3,9
200	2,8	3,0	3,2	3,5	3,7	4,0	4,3	4,7
225	3,9	4,3	4,3	4,7	4,7	5,2	5,6	6,2
250	3,7	4,1	3,8	4,2	4,9	5,4	5,7	6,3
280	3,8	4,1	4,9	5,4	5,8	6,3	6,5	7,0
315S/M	3,1	3,4	4,9	5,4	5,7	6,2	6,3	6,9
315L	3,4	3,6	4,0	4,9	5,1	5,5	6,4	6,9
355M/L	3,3	3,6	5,8	6,3	6,5	7,1	8,2	8,9
355A/B	3,0	3,2	4,1	4,4	4,2	4,5	5,3	6,8

Table 9 - Maximum permissible radial thrusts for ball bearings (horizontal mounting).

Radial Thrust - Roller Bearings

Maximum permissible radial thrust - 50 Hz - Fr in (kN) 40.000 hours						
Frame	4 poles		6 poles		8 poles	
	L/2	L	L/2	L	L/2	L
160	5,0	3,2	5,1	3,3	5,1	3,3
180	8,8	5,5	8,8	5,6	8,8	5,6
200	11,2	7,3	11,2	7,4	11,3	7,4
225S/M	12,9	7,6	12,9	7,6	13,0	7,8
250S/M	13,7	8,9	13,8	8,9	13,7	8,9
280S/M	19,3	12,6	19,4	12,8	19,6	12,9
315S/M	25,8	12,9	27,4	13,0	27,4	13,2
315L	21,5	10,1	20,1	9,4	26,1	12,2
355M/L	34,0	17,3	33,5	16,4	33,5	16,1
355A/B	31,4	14,9	25,4	12,0	28,4	13,5

Table 10 -Maximum permissible radial thrusts for roller bearings (horizontal mounting)

Note: the values given for roller bearings consider AISI 4140 steel shafts.

Axial Thrust - Ball Bearings

Maximum permissible axial thrust - 50 Hz - Fa in (kN) - 20.000 hours							
Frame	Poles	Horizontal		Vertical with shaft upwards		Vertical with shaft downwards	
		Pushing	Pulling	Pushing	Pulling	Pushing	Pulling
63	2	0,2	0,2	0,2	0,2	0,2	0,2
	4	0,3	0,3	0,3	0,3	0,3	0,3
	6	0,3	0,4	0,3	0,4	0,4	0,3
	8	0,3	0,4	0,3	0,4	0,4	0,3
71	2	0,2	0,3	0,2	0,3	0,2	0,3
	4	0,3	0,4	0,3	0,4	0,3	0,4
	6	0,4	0,5	0,4	0,5	0,4	0,5
	8	0,5	0,6	0,4	0,6	0,5	0,6
80	2	0,3	0,4	0,3	0,4	0,3	0,4
	4	0,4	0,6	0,3	0,6	0,4	0,5
	6	0,5	0,7	0,4	0,7	0,5	0,7
	8	0,6	0,8	0,5	0,9	0,6	0,8
90	2	0,4	0,4	0,3	0,5	0,4	0,4
	4	0,5	0,6	0,5	0,7	0,5	0,6
	6	0,6	0,7	0,6	0,8	0,6	0,7
	8	0,8	0,9	0,7	0,9	0,8	0,8
100	2	0,4	0,6	0,3	0,7	0,4	0,6
	4	0,5	0,8	0,4	0,9	0,5	0,8
	6	0,7	1	0,6	1,1	0,7	1
	8	0,8	1,2	0,7	1,3	0,8	1,1
112	2	0,5	0,8	0,5	0,9	0,6	0,7
	4	0,7	1,1	0,7	1,2	0,8	1
	6	1	1,4	0,9	1,5	1	1,3
	8	1,1	1,5	1	1,7	1,1	1,4
132	2	0,7	1,3	0,6	1,5	0,8	1,2
	4	1	1,8	0,8	2,1	1	1,7
	6	1,2	2,2	1,1	2,5	1,3	2,1
	8	1,4	2,5	1,2	2,8	1,4	2,3
160	2	2,4	1,7	0,2	2,1	2,8	1,5
	4	3	2,3	2,7	2,7	3,4	2
	6	3,4	2,7	3,1	3,3	4	2,4
	8	3,9	3,2	3,6	3,7	4,4	2,9
180	2	3,2	2,3	2,9	2,8	3,7	2
	4	3,9	3	3,6	3,7	4,6	2,7
	6	4,7	3,8	4,2	4,5	5,3	3,3
	8	5,2	4,4	4,8	5,1	6	3,9
200	2	3,6	2,6	3,1	3,3	4,3	2,1
	4	4,5	3,5	4	4,3	5,3	3
	6	5,2	4,2	4,7	5,1	6,1	3,7
	8	6	5	5,5	5,9	6,9	4,5
225	2	4,6	3,8	3,8	4,9	5,7	3,1
	4	5,8	5	5	6,3	7,1	4,2
	6	6,7	5,9	5,7	7,6	8,4	4,9
	8	7,8	7	6,9	8,5	9,3	6,1
250	2	4,5	3,7	3,7	4,9	5,6	3
	4	5,4	4,7	4,2	6,6	7,4	3,4
	6	6,8	6	5,4	8	8,8	4,6
	8	7,8	7,1	6,6	8,9	9,7	5,9
280	2	4,4	3,7	3,2	5,4	6,2	2,4
	4	6,3	5,5	4,6	8	8,8	3,9
	6	7,6	6,8	5,8	9,4	10,2	5
	8	8,5	7,8	6,6	10,6	11,4	5,8
315S/M	2	4,1	3,3	2,4	5,9	6,7	1,6
	4	6,8	6	4,3	10	10,7	3,5
	6	8	7,2	5,2	11,9	12,7	4,5
	8	9,1	8,3	6,2	13,2	14	5,5
315L	2	3	2,2	1,1	5	5,7	0,4
	4	4,5	3,7	1,4	8,2	8,9	0,6
	6	5,2	4,4	1,9	9,5	10,3	1,2
	8	6,3	5,5	3,4	10	10,8	2,6
355M/L	2	4,4	3,7	1,1	8,8	9,5	0,3
	4	7,7	7	3,2	13,9	14,7	2,5
	6	9,1	8,4	4,7	15,3	16	3,9
	8	10,9	10,2	6,4	17,2	17,9	5,7
355A/B	2	4,1	3,3	On request			
	4	6,8	6				
	6	7,8	7				
	8	9,8	9				

Table 11 -Maximum pemissible axial thrusts for ball bearings (horizontal mounting).

Axial Thrust - Ball Bearings

Maximum permissible axial thrust - 50 Hz - Fa in (kN) - 40.000 hours							
Frame	Poles	Horizontal		Vertical with shaft upwards		Vertical with shaft downwards	
		Pushing	Pulling	Pushing	Pulling	Pushing	Pulling
63	2	0,1	0,1	0,1	0,1	0,1	0,1
	4	0,2	0,2	0,2	0,2	0,2	0,2
	6	0,2	0,2	0,2	0,2	0,2	0,2
	8	0,2	0,2	0,2	0,2	0,2	0,2
71	2	0,1	0,2	0,1	0,2	0,1	0,2
	4	0,2	0,3	0,2	0,3	0,2	0,2
	6	0,2	0,3	0,2	0,3	0,2	0,3
	8	0,3	0,4	0,3	0,4	0,3	0,4
80	2	0,2	0,3	0,1	0,3	0,2	0,3
	4	0,2	0,4	0,2	0,4	0,2	0,3
	6	0,3	0,5	0,3	0,5	0,3	0,4
	8	0,4	0,6	0,3	0,6	0,4	0,5
90	2	0,2	0,3	0,2	0,3	0,2	0,2
	4	0,3	0,4	0,3	0,4	0,3	0,3
	6	0,4	0,5	0,4	0,5	0,4	0,4
	8	0,5	0,6	0,5	0,6	0,5	0,5
100	2	0,2	0,4	0,2	0,4	0,2	0,3
	4	0,3	0,5	0,2	0,6	0,3	0,5
	6	0,4	0,7	0,3	0,8	0,4	0,6
	8	0,5	0,8	0,4	0,9	0,5	0,7
112	2	0,3	0,5	0,3	0,6	0,3	0,4
	4	0,4	0,7	0,4	0,8	0,5	0,6
	6	0,6	0,9	0,5	1,1	0,6	0,8
	8	0,7	1	0,6	1,2	0,7	0,9
132	2	0,4	0,9	0,3	1,1	0,5	0,8
	4	0,6	1,2	0,5	1,4	0,6	1,1
	6	0,8	1,5	0,6	1,8	0,8	1,3
	8	0,9	1,7	0,7	2	0,9	1,5
160	2	1,8	1,1	1,6	1,5	2,2	0,9
	4	2,2	1,5	1,9	1,9	2,6	1,2
	6	2,5	1,8	2,2	2,3	3,1	1,5
	8	2,9	2,2	2,5	2,7	3,4	1,8
180	2	2,4	1,5	2,1	2	2,9	1,2
	4	2,9	2	2,5	2,6	3,5	1,6
	6	3,4	2,5	3	3,2	4,1	2,1
	8	3,9	3	3,5	3,7	4,6	2,6
200	2	2,7	1,7	2,2	2,4	3,4	1,2
	4	3,3	2,3	2,8	3,1	4,1	1,8
	6	3,8	2,8	3,3	3,8	4,8	2,3
	8	4,4	3,4	3,9	4,3	5,3	2,9
225	2	3,4	2,6	2,7	3,7	4,5	1,9
	4	4,2	3,5	3,4	4,7	5,5	2,6
	6	4,8	4	3,8	5,7	6,5	3
	8	5,7	4,9	4,8	6,4	7,1	4,1
250	2	3,4	2,5	2,5	3,7	4,5	1,8
	4	3,9	3,1	2,6	5	5,9	1,8
	6	4,9	4,1	3,6	6,2	7	2,8
	8	5,8	4,9	4,5	6,8	7,6	3,8
280	2	3,3	2,5	2	4,3	5,1	1,2
	4	4,6	3,8	2,9	6,2	7	2,1
	6	5,4	4,7	3,6	7,3	8	2,8
	8	6,1	5,4	4,2	8,2	9	3,4
315	2	2,9	2,2	1,2	4,8	5,5	0,4
	4	4,7	4	2,2	7,9	8,6	1,4
	6	5,6	4,8	2,8	9,4	10,2	2
	8	6,4	5,6	3,4	10,4	11,2	2,6
315L	2	3	2,2	1,1	5	5,7	0,4
	4	4,5	3,7	1,4	8,2	8,9	0,6
	6	5,2	4,4	1,9	9,5	10,3	1,2
	8	6,3	5,5	3,4	10	10,8	2,6
355M/L	2	3,1	2,4	0,6	6,7	7,5	0,2
	4	5,5	4,7	1,9	1,1	11,6	1,2
	6	6,3	5,6	2,8	11,8	12,7	2
	8	7,6	6,8	3,8	13,2	13,7	2,9
355A/B	2	2,9	2,2	On request			
	4	4,6	3,9				
	6	5,2	4,5				
	8	6,5	5,8				

Table 12 -Maximum permissible axial thrusts for ball bearings (horizontal mounting)

Lubrication Intervals (Ambient ≤ 40°C at Rated Speed)

Lubrication intervals (hours)			
Frame	Poles	50 Hz	60 Hz
160	2	25000	25000
	4		
	6		
	8		
180	2	25000	25000
	4		
	6		
	8		
200	2	25000	25000
	4		
	6		
	8		
225	2	5000	4000
	4	14000	12000
	6	20000	17000
	8	24000	20000
250	2	5000	4000
	4	14000	12000
	6	20000	17000
	8	24000	20000
280	2	5000	4000
	4	13000	10000
	6	18000	16000
	8	20000	20000
315	2	5000	4000
	4	11000	8000
	6	16000	13000
	8	20000	17000
355	2	5000	4000
		4000	On request
	4	9000	6000
	6	13000	11000
	8	19000	14000

Table 13 -Lubrication intervals for ball bearings (horizontal mounting).

Note: the amount of grease is indicated on the nameplate.

Lubrication intervals (hours)			
Frame	Poles	50 Hz	60 Hz
160	4	25000	25000
	6		
	8		
180	4	25000	25000
	6		
	8		
200	4	25000	21000
	6		25000
	8		
225	4	11000	9000
	6	16000	13000
	8	20000	19000
250	4	11000	9000
	6	16000	13000
	8	20000	19000
280	4	9000	7000
	6	14000	12000
	8	19000	17000
315	4	7000	5000
	6	12000	9000
	8	17000	15000
355	4	5000	4000
	6	9000	7000
	8	14000	13000

Table 14 -Lubrication intervals for roller bearings (horizontal mounting).

Note: the amount of grease is indicated on the nameplate.

5.2.2. Bearing Monitoring

W22 motors can, on request, be equipped with bearing temperature detectors to provide continuous monitoring of bearing operating conditions, most commonly used is the Pt-100 temperature detector.

This type of monitoring is extremely important considering that it directly affects the grease and bearing lives particularly on motors equipped with regreasing facilities.

6. Mounting Forms

Motors are supplied, as standard, in the B3T foot configuration, with the terminal box on top.

Figure 24 -B3T mounting

The mounting configuration for the W22 motor lines comply with IEC 60034-7 standard. Standard mounting forms and their variations are shown in table 15. After the designation, a characteristic letter is used to define the terminal box position. So, the mounting code IM B3 can be seen in WEG documents as detailed below (without IM code).

B3L - terminal box on left hand side of the motor frame
B3T - terminal box on top of the motor frame
B3R - terminal box on right hand side of the motor frame

Note: The terminal box position is defined viewing the motor from the shaft end. Mounting forms and their variations are indicated in table 15.

Basic mountings	Other type of mounting				
IM B3	IM V5	IM V6	IM B6	IM B7	IM B8
IM 1001	IM 1011	IM 1031	IM 1051	IM 1061	IM 1071
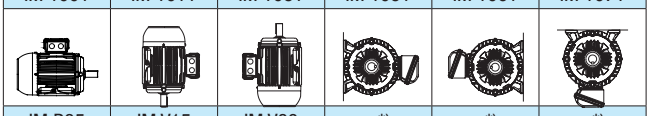					
IM B35	IM V15	IM V36	- *)	- *)	- *)
IM 2001	IM 2011	IM 2031	IM 2051	IM 2061	IM 2071
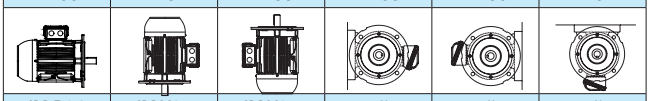					
IM B34	IM V17	IM V37	- *)	- *)	- *)
IM 2101	IM 2111	IM 2131	IM 2151	IM 2161	IM 2171
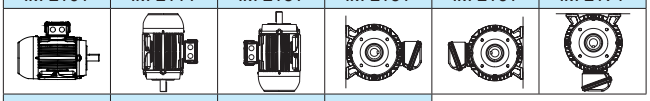					
IM B5	IM V1	IM V3	IM B30		
IM 3001	IM 3011	IM 3031			
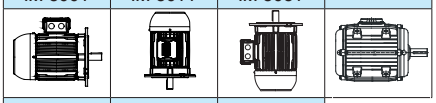					
IM B14	IM V18	IM V19			
IM 3601	IM 3611	IM 3631			
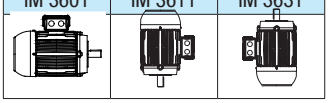					

Table 15 - Mountings configurations

** Non-defined mountings by IEC 60034-7.*

Important:

1. The mountings IM B34 and IM B14 with C-DIN flange, in accordance with standard EN 50347, are limited to frame size 132. As an option, C Flanges in accordance with NEMA MG 1 Part 4 standard are available for frames 63 to 355M/L.
2. For motors mounted vertically shaft down fitting of a drip cover / impact canopy is recommended to prevent ingress of small objects into the fan cover. The increase in total length of the motor with drip cover / impact canopy is shown in the Section 20.
3. For motors mounted vertically with shaft up and installed in environments containing liquids, the use of a rubber slinger is recommended to prevent the ingress of liquid into the motor through the shaft.

7. Degree of Protection / Sealing System / Painting

7.1. Degree of Protection

As per IEC 60034-5, the degree of protection of a rotating electrical machine consists of the letters IP (ingress protection), followed by two characteristic numerals, with the following definitions:

a) First characteristic numeral: refers to protection of persons against or approach to live parts and against contacts with moving parts (other than smooth rotating shafts and the like) inside the enclosure and protection of the machine against ingress of solid and foreign objects.

b) Second characteristic numeral: protection of machines against harmful effects due to ingress of water.

As standard, W22 motors have the degree of protection IP55. According to IEC 60034-5, this defines the degree of protection as follows:

a) First characteristic numeral 5: machine protected against dust. The enclosure is protected against contact with moving parts. Ingress of dust is not totally prevented, but dust does not enter in sufficient quantity to interfere with satisfactory operation of the machine.

b)Second characteristic numeral 5: Machine protected against water jets. Water projected by a nozzle against the machine from any direction shall have no harmful effect.

7.2. Sealing System

V-Ring seals are utilized on the shafts of W22 foot mounted motors in frame sizes 63 to 200. For frames 225S/M to 355A/B shaft sealing is provided using the exclusive WSeal®, which consists of a double lipped V-Ring with a metallic cap (see figure 25). This configuration operates like a labyrinth preventing ingress of water and dust into the motor.

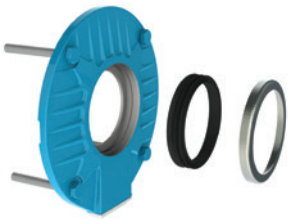

Figure 25 - WSeal®

Alternatively, W22 motors are available with other sealing arrangements, for example, oilseal, taconite labyrinth and the WEG exclusive W3 Seal® (see Section 16 - Optional features).

When fitted with a flange, the recommended seal is either a lip seal (no contact with liquid) or oilseal (direct contact with liquid).

7.3. Painting

Figure 26 -WEG internal painting plan

The standard painting plans utilized on W22 motors meet the atmospheric corrosive category “C3” as indicated in the DIN EN ISO 12944-2 standard. They are designed for use on motors installed in normal environments, slightly severe, sheltered or non-sheltered, for industrial use, with low relative humidity, normal temperature variations and the presence of SO_2.

Motor frame sizes 63 to 132 utilize WEG internal painting plan 207A (semi-matt), which consists of:

Primer: One coat of red oxide, alkyd based primer, with minimum thickness of 20 mm.

Finishing: One coat of alkyd based synthetic enamel paint, with minimum thickness of 60 mm.

And, motors in frame sizes 160-355 utilise the WEG internal paint plan 203A (semi-gloss):

Primer: One coat of red oxide, alkyd based primer, with minimum dry coat thickness of 20 mm.

Finishing: One coat of alkyd based synthetic enamel paint, with minimum dry coat thickness of 60mm.

Note: These painting plans are not recommended for direct exposure to acid steam, alkalis, solvents and salty environments.

Alternative painting plans are available on request, which are suitable to guarantee additional protection in aggressive environments, either protected or unprotected (see section 16 - Optional features).

For painting over the WEG original painting, please make sure with your paint supplier that the new painting system is compatible with the base paint used in WEG motors and that the surfaces are prepared accordingly, otherwise it can affect the performance of the paint plan and void the product warranty.

7.3.1. Tropicalized Painting

The integrity of the insulation system is the primary consideration when determining the lifetime of an electric motor. High humidity can result in premature deterioration of the insulation system, therefore for any ambient temperature with relative humidity above 95%, it is recommended to coat all internal components of the motor with an epoxy painting, also known as tropicalization.

8. Voltage / Frequency

As defined in IEC 60034-1 the combination of voltage and frequency variations are classified as Zone A or Zone B, as per figure 27.

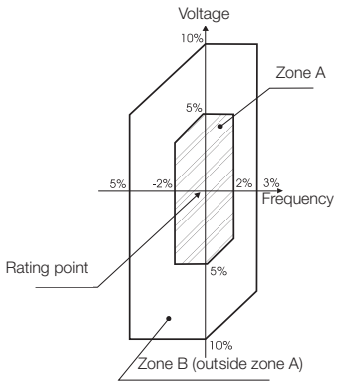

Figure 27 -Rated voltage and frequency limits for electric motors

IEC 60034-1 states that the motor must be suitable to perform its main function (supply torque) continuously within Zone A. However, this motor may not fully meet its performance characteristics due to power supply voltage and frequency variation, which can result in temperature rise above the rated value.

The motor must also be suitable to perform its main function (supply torque) at Zone B. However, the performance characteristic changes will be greater than those operating in Zone A. The temperature rise will also be higher than that at rated voltage and frequency and when operating within Zone A. Prolonged operation near the boundaries of Zone B is not recommended.

9. Overload Capacity

As per IEC 60034-1, motors having rated output not exceeding 315 kW and rated voltages not exceeding 1 kV shall be capable of withstanding a current equal to 1,5 times the rated current for not less than 2 minutes.

10. Ambient and Altitude

Unless otherwise specified, the rated outputs shown in the electrical data tables within this catalogue refer to continuous duty operation S1, as per IEC 60034-1 and under the following conditions:

- ambient temperature range -20 °C to +40 °C
- altitudes up to 1000 metres above sea level

For operating temperatures and altitudes differing from those above, the factors indicated in table 16 must be applied to the nominal motor power rating in order to determine the derated output (Pmax).

Pmax = Pnom x correction factor

T (°C)	Altitude (m)								
	1000	1500	2000	2500	3000	3500	4000	4500	5000
10							0,97	0,92	0,88
15						0,98	0,94	0,90	0,86
20					1,00	0,95	0,91	0,87	0,83
25				1,00	0,95	0,93	0,89	0,85	0,81
30			1,00	0,96	0,92	0,90	0,86	0,82	0,78
35		1,00	0,95	0,93	0,90	0,88	0,84	0,80	0,75
40	1,00	0,97	0,94	0,90	0,86	0,82	0,80	0,76	0,71
45	0,95	0,92	0,90	0,88	0,85	0,81	0,78	0,74	0,69
50	0,92	0,90	0,87	0,85	0,82	0,80	0,77	0,72	0,67
55	0,88	0,85	0,83	0,81	0,78	0,76	0,73	0,70	0,65
60	0,83	0,82	0,80	0,77	0,75	0,73	0,70	0,67	0,62
65	0,79	0,76	0,74	0,72	0,70	0,68	0,66	0,62	0,58
70	0,74	0,71	0,69	0,67	0,66	0,64	0,62	0,58	0,53
75	0,70	0,68	0,66	0,64	0,62	0,60	0,58	0,53	0,49
80	0,65	0,64	0,62	0,60	0,58	0,56	0,55	0,48	0,44

Table 16 -Correction factors for altitude and ambient temperature

11. Insulation & Temperature Rise

W22 motors are supplied with class F insulation and Class B (80 K) temperature rise at normal operating conditions (unless otherwise specified).

The difference between the temperature of the class F insulation (105 K) and the temperature rise of the design (80 K) means that, in practice, W22 motors are suitable to deliver outputs above the rated values up to a limit where the temperature rise reaches the temperature rise value of the insulation class.

The ratio between temperature rise and service factor is given by the equation below:

$$\Delta T_{FINAL}\,(S.F.)^2 \times \Delta T_{INITIAL}$$

From the above calculation, we can conclude that the service factor is approximately 1.15. This reserve of temperature permits W22 motors with class B temperature rise (80 K) to operate continuously under the following conditions:

- Up to 15% above their rated output, considering 40 °C ambient temperature and 1000 m.a.s.l. or;
- At ambient temperatures up to 55°C or altitudes up to 3000 m.a.s.l. maintaining their nominal rated output.

Important: Please note that under these conditions the combined ambient and temperature rise may reach class F limits.

Table 16 shows the safety margins per thermal class.

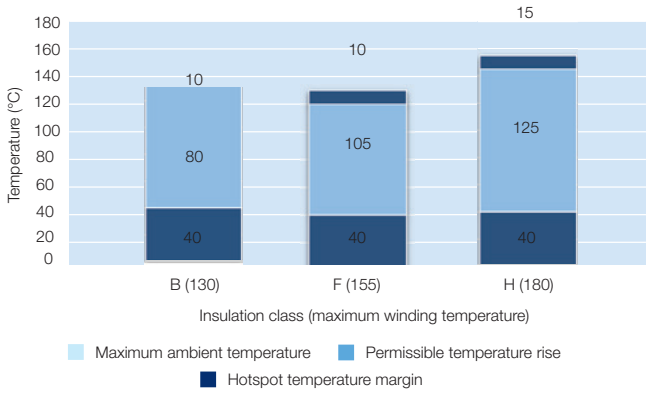

Figure 28 -Safety margins per thermal class.

Bearing lubrication intervals will change under operating conditions other than 40 °C maximum ambient temperature and 1000 metres above sea level. Contact WEG for further information.

All W22 motors are wound with the WISE® insulation system which consists of enamelled wire impregnated with solvent free resin which protects motors at temperatures up to 200 °C. The WISE® system also permits motor operation with variable speed drives (see section 13).

11.1. Space Heaters

The use of space heaters is recommended in two situations:

- Motors installed in environments with relative air humidity up to 95%, in which the motor may remain idle for periods greater than 24 hours;
- Motors installed in environments with relative air humidity greater than 95%, regardless of the operating schedule. It should be highligthed that in this situation it is strongly recommended that an epoxy painting, more commonly known as tropicalization, is applied to the internal components of the motor. More information can be found in section 7.3.

The supply voltage for space heaters must be defined by the Customer. For all frame sizes, W22 motors can be provided with space heaters suitable for 110-127 V, 220-240 V and 380-480 V. As an option, dual voltage heaters of 110-127 / 220-240 V can be supplied for motor frame sizes 112 to 355A/B, through reconnection of the heater cables inside the terminal box.
The power rating and number of space heaters fitted depends on the size of the motor as indicated in table 17 below:

Frame	Quantities	Total power rated (W)
63 to 80	1	7,5
90 and 100	1	11
112	2	22
132 and 160	2	30
180 and 200	2	38
225 and 250	2	56
280 and 315	2	140
355	2	174

Table 17 -Power and quantity of space heaters

12. Motor Protections

Protections available for the W22 motor line can be classified as follows:

- Based on operating temperature
- Based on operating current

Refer to section 15 for further details of the standard and optional protection types available for W22 motors.

12.1. Protection Based on Operating Temperature

Continuous duty motors must be protected from overload either by a device integrated into the motor or via an independent protection system, usually a thermal relay with rated or setting current, equal to or below the value obtained when multiplying the power supply rated current (In), as per table 18.

Service factor	Relay setting current
1,0 up to 1,15	In x S.F.
≥ 1,15	(In x S.F.) - 5%

Table 18 -Relay setting current referred to service factor

12.1.1. Pt-100

Figure 29 - Pt-100

These are temperature detectors with operating principle based on the properties that some materials vary the electric resistance with the variation in temperature (usually platinum, nickel or copper). They are also fitted with calibrated resistances that vary linearly with temperature, allowing continuous reading of motor operating temperature through a monitoring display, with high precision rate and response sensitivity.
The same detector can serve as alarm (with operation above the regular operating temperature) and trip (usually set up for the maximum temperature of the insulation class).

12.1.2. Thermistor (PTC)

Figure 30 - Thermistor (PTC)

A thermistor is a non-linear resistance temperature detector, made from semi-conductor material. Each specific thermistor has its own unique resistance vs. temperature characteristic i.e. they have one pre-set, non-adjustable tripping point.
PTC (positive temperature coefficient) thermistors have a resistance that increases dramatically at its defined tripping temperature. This sudden variation in resistance blocks the PTC current which causes the output relay to operate and the main circuit to switch off.
Thermistors are compact, do not wear, and feature faster response times when compared to other types of thermal protectors, although they do not allow continuous monitoring of motor operating temperature.
Together with their electronic circuits, these thermistors provide full protection against overheating caused by overload, under or overvoltage or frequent reversing operations.
Where thermistor protection is required to provide both alarm and trip operation, it is necessary for each phase of the motor winding to be equipped with two sets of appropriately rated thermistors.
WEG Automation offers a range of electronic relays 'RPW' intended specifically to read the PTC signal and operate its output relay. For further information please visit the website www.weg.net.

12.1.3. Bimetallic Thermal Protectors

These are silver-contact thermal sensors, normally closed, that operate at certain temperature rise. When their operating temperature decreases, they return to their original position instantaneously, allowing the silver contact to close again.
The bimetallic thermal protectors are series-connected with the contactor coil, and can be used either as alarm or trip.

There are also other types of thermal protectors such as Pt-1000, KTY and thermocouples. Contact your local WEG office for further information.

12.2. Protection Based on Operating Current

Overloads are processes which usually see the temperature increase gradually. To overcome this problem, the thermal protectors described in item 12.1 are quite suitable. However, the only way to protect motors against short-circuit currents is the application of fuses. This type of protection depends directly on the motor current and is highly effective in cases of locked rotor.
WEG Automation supplies a range of fuses in versions D and NH. Visit the website www.weg.net for further information.

13. Variable Speed Drive Application

13.1. Considerations Regarding Voltage Spikes and the Insulation System

The stator windings of W22 motors are wound with class F insulation (class H optional) and are suitable for either DOL starting or via a variable speed drive. They incorporate the WEG exclusive insulation system - WISE® (WEG Insulation System Evolution) - which ensures superior electrical insulation characteristics.
The stator winding is suitable for variable speed drive application, taking into account the limits shown in table 19.

Motor rated voltage	Voltage Spikes 1)	*dV/dt* 2)	Rise time 2)	Time between pulses
	At motor terminals (phase-phase)	At motor terminals (phase-phase)		
$V_{rated} < 460$ V	≤ 1600 V	≤ 5200 V/µs	≥ 0,1 µs	≥ 6 µs
460 V ≤ V_{rated} < 575 V	≤ 1800 V	≤ 6500 V/µs		
575 V ≤ V_{rated} ≤ 1000 V	≤ 2200 V	≤ 7800 V/µs		

Table 19 -Supportability of random wound motors' insulation system.

1) Peak voltage in the case of unipolar pulses. Peak-to-peak voltage in the case of bipolar pulses.

2) dV/dt and Rise time definition according to Nema Std. MG1 - Part 30.

Notes:

1 -If one or more of the above conditions is not respected, a filter (load reactor or dV/dt filter) must be installed in the output of the VSD.

2 - W22 motors with rated voltage greater than 575 V, which at the time of purchase did not have any indication of operation with VSD, are able to withstand the electrical limits set in the table above for rated voltage up to 575 V. If such conditions are not fully satisfied, output filters must be used.

3 - W22 motors of the dual voltage type, for example 400/690 V or 380/660 V, which at the time of purchase were not specified for VSD operation, , are permitted to be operated with the VSD at the higher voltage provided that the limits defined in the table above for rated voltage up to 460 V are fully respected. Otherwise, a load reactor or a dV/dt filter must be installed in the VSD output.

13.2. Influence of the VSD on the Motor Temperature

Motors operating with frequency inverters may present a higher temperature rise than when operating under sinusoidal supply. This occurs due to the combined effects of the loss increase resulting from the PWM harmonics and the reduction in ventilation experienced by self-ventilated motors when operating at low frequencies. There are basically three solutions to avoid excessive overheating of the motor in VSD applications:

- Torque derating (oversizing of the self-ventilated motor frame size);
- Forced ventilation (use of an independent cooling system);
- Optimal Flux Solution (exclusive to applications where both motor and drive are WEG).

13.2.1. Torque Derating Criteria

In order to maintain the temperature rise of WEG motors within acceptable levels, when supplied by VSD, the speed range-related loadability limits established in figures 31 (for operation under constant flux condition) or 32 (for operation under optimal flux condition) must be observed.

Notes:

1 - These derating curves relate to the motor thermal capability only and do not concern the insulation class. Speed regulation will depend on VSD mode of operation and proper adjustment.

2 - Torque derating is usually necessary when the motor is required to driveconstant torque loads (e.g. screw compressors, conveyors, extruders, etc.). For squared torque loads, such as pumps and fans, no torque derating is normally required.

3 - W22 motors in frame sizes 90S and above can be blower cooled (independently ventilated) under request. In such cases, the motor will be suitable for VSD operation without torque derating regardless the load type.

4 - For operation above base (nameplate) speed, mechanical issues must be also observed. Please refer to table 20 for the maximum limits for safe operation.

13.2.2. Constant Flux Condition

Applicable when the motor is supplied by any commercial drive operating with any control scheme other than the Optimal Flux available in WEG drives.

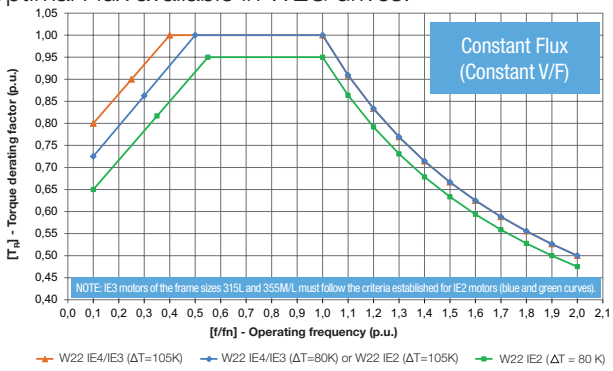

Figure 31 -Derating curves for constant flux condition

13.2.3. Optimal Flux Condition

The study of the composition of the overall motor losses and its relation to operation parameters such as the frequency, the magnetic flux, the current, and the speed variation led to the determination of an optimal flux value for each operating frequency. The implementation of this solution within the CFW-11 and CFW-700 control algorithms mean that the motor optimal flux condition can be automatically applied by the drive throughout the speed range, resulting in a continuous minimization of losses. As a consequence of this loss minimization, the use of the optimal flux control provides higher efficiency and lower temperature rise. Therefore, the torque derating factors for this operating condition are lower than for constant V/f, as shown in figure 32.

The optimal flux solution was developed for low frequency applications with constant torque loads.
It should not be used for variable torque loads nor when the operating speed range includes points above the base (rated) frequency. The Optimal Flux Solution may be only applied under the following conditions:

- *The motor has an efficiency class IE2 or above;*
- *The motor is controlled by a WEG drive (CFW-11 or CFW-700);*
- *Sensorless vector control is used.*

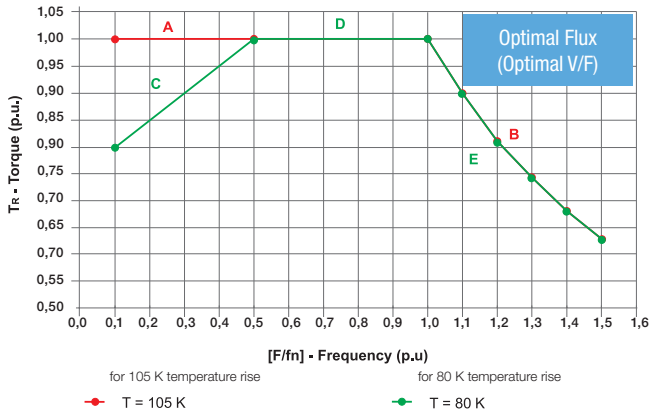

Figure 32 -Derating curves for Optimal Flux condition

Output (kW)	Maximum safe operating speeds (rpm) TEFC Motors		
	2 poles	4 poles	6 poles
0,18	7200	3600	2400
0,25	7200	3600	2400
0,37	7200	3600	2400
0,55	7200	3600	2400
0,75	7200	3600	2400
1,1	7200	3600	2400
1,5	7200	3600	2400
2,2	7200	3600	2400
4,0	7200	3600	2400
5,5	5400	3600	2400
7,5	5400	3600	2400
11	5400	3600	2400
15	5400	3600	2400
18,5	5400	2700	2400
22	5400	2700	2400
30	4500	2700	2400
37	4500	2700	2400
45	3600	2700	2400
55	3600	2700	2400
75	3600	2700	1800
90	3600	2700	1800
110	3600	2700	1800
150	3600	2250	1800
185	3600	2250	1800
220	3600	2250	1800
260	3600	1800	1800
300	3600	1800	-
330	3600	1800	-
370	3600	1800	-

Table 20 -Maximum safe operating speeds (rpm) for W22 motors driven by VSD

Notes:

1 - The values in table 20 are related to mechanical limitations. For operation above nameplate speed, the electrical limitations (motor torque capability) must be also observed.

2 - The limits established in table 20 are in accordance with the IEC 60034-1 Table 17.

3 - The permissible overspeed value is 10% above the limits given in Table 20 (not to exceed 2 minutes in duration) except where the maximum safe operating speed is the same as the synchronous speed at 60 Hz - in such case, please contact WEG.

4 - Operation above nameplate speed may require specially refined motor balancing. In such case, vibration and noise limits per IEC 60034-14 and IEC 60034-9, respectively, are not applicable.

5 - Bearing life will be affected by the length of time the motor is operated at various speeds.

6 - For speeds and ratings not covered by the table above, please contact WEG.

13.3. Considerations Regarding Bearing Currents

Motors for variable speed drive applications up to frame size 280S/M, do not generally require any special considerations with respects to the bearings. However, for frame sizes 315S/M upwards additional measures should be taken in order to avoid detrimental bearing currents.

This can be accomplished by utilisation of an insulated bearing or insulated hub endshield and a shaft grounding brush mounted on the opposite side. W22 motors will normally be supplied duly protected per such recommendations when operation with VSD is specified at the time of purchase. Otherwise, WEG can modify motors that were not originally supplied with such protection under request.

13.4. Forced Ventilation

For those cases where an independent cooling system is required, W22 motors can be supplied with forced ventilation, as shown in figure 33.

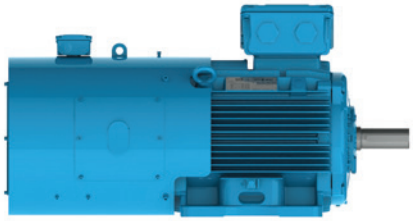

Figure 33 -Forced ventilation for W22 motors

When forced ventilation is assembled on the motor in the factory, the overall motor length will be increased, see Section 21. External Motor Dimensions with Forced Ventilation.

As a local stock modification option, an alternative forced ventilation kit can be fitted. Please contact your local WEG office for details of these dimensions.

13.5. Encoders

W22 motors may be supplied with encoders for speed control in closed loop. Encoders can be fitted to motors with either forced ventilation(TEBC) or with shaft mounted cooling fan (TEFC). When encoders are fitted, TEFC motors may not have a second shaft end or be fitted with drip cover.

The following models of encoder are available for supply:

- Dynapar - B58N - 1024ppr (hollow shaft)- frames 90 to 355
- Leine & Linde - XH861 - 1024ppr (hollow shaft)- frames 160 to 355
- Hengstler - RI58 - 1024ppr (hollow shaft) *
- Hubner Berlin - HOG 10 - 1024ppr (hollow shaft)*

**These models can be supplied on request.*

Note: The encoders described above have 1024 pulses per revolution. Optionally, models with 2048 pulses per revolution are available.

For more information on VSD motor applications, visit our website (www.weg.net) and download the Technical Guide - Induction motors Fed by PWM (code 50029350).

14. Tolerances for Electrical Data

The following tolerances are permissible in accordance with IEC 60034-1:

Efficiency (η)	-0,15 (1-η) for Pnom ≤ 150 kW / -0,1 (1-η) for Pnom > 150 kW Where η is a decimal number
Power factor	$\frac{1 - \cos \Phi}{6}$
	Minimum 0,02 and Maximum 0,07
Slip	± 20% for Pnom ≥ 1 kW and ± 30 % for Pnom < 1 kW
Starting current	20% (without lower limit)
Starting torque	- 15% + 25%
Breakdown torque	- 10 %
Moment of inertia	± 10 %

Table 21 -Tolerances for electrical data

15. Construction Features

Frame			63	71	80	90	100	112	132	160	180
Mechanical features											
Mounting			B3T								
Frame material			FC-200 cast iron								
Degree of protection			IP55								
Grounding			Simple grounding - one earth terminal inside the terminal box								
Cooling method			Totally enclosed fan cooled - IC411								
Fan material		2P	Polypropylene								
		4 - 12P									
Fan cover material			Steel							FC-200 cast iron	
Endshields material			FC-200 cast iron								
Drain hole	IP55/IP56		Automatic T labyrinth drain plug								
	IP65/IP66		Rubber drain plug								
Bearings	Drive end side	2p	6201-ZZ	6202-ZZ	6204-ZZ	6205-ZZ	6206-ZZ	6207-ZZ	6308-ZZ	6309-ZZ-C3	6311-ZZ-C3
		4 - 12p									
	Non drive end side	2p			6203-ZZ	6204-ZZ	6205-ZZ	6206-ZZ	6207-ZZ	6209-ZZ-C3	6211-ZZ-C3
		4 - 12p									
	Locking		Without bearing cap and with spring washer at NDE							Internal bearing cap at DE with spring washer at NDE	
Shaft Seal			V' Ring								
Lubrication	Type of grease - 50Hz		Mobil Polyrex EM								
	Type of grease - 60Hz - 2P										
	Type of grease - 60Hz (4P and above)		Mobil Polyrex EM								
	Grease fitting		Without grease fitting								
Terminal block			BMC terminal block								
Terminal box material			FC-200 cast iron								
Cable entries	Main	Size	2xM20x1,5			2xM25x1,5		2xM32x1,5		2xM40x1,5	
	Threaded plug		Plastic plug for transport and storage purposes								
	Accessory	Size	1xM20x1,5 lateral threaded hole when fitted with accessories								
Shaft	Material		SAE 1040/45								
	DE Threaded hole	2p	M4	M5	M6	M8	M10	M10	M12	M16	
		4 - 12p									
Direction of rotation			Bidirectional								
Vibration level			Grade A								
Nameplate material			Stainless steel AISI 304								
Painting	Type		207 A							203 A	
	Performance Criteria		Corrosive category C3 according to DIN EN ISO 12944-2								
	Colour		RAL 5009								
Electrical features											
Design	50Hz e 60Hz (IE1/IE2/IE3)		N								
	60Hz (IE4)										
	50Hz (IE4)		NE								
	50Hz (IE5)		NONE								
Voltage / Frequency			220-240/380-415//460 V (50 // 60Hz)					380-415/660//460 V (50 // 60Hz)			
Winding	Impregnation		Dip and bake								
	Insulation class		F (DT 80K)								
Service factor	50Hz (IE1, IE2, IE3, IE4, IE5)		1,00								
	60Hz (IE1, IE2)		1,15								
	60Hz (IE3)		1,25								
Rotor			Aluminium die cast								
Thermal protection			Without thermal protection							PTC Thermistor - 155°C	

Frame			200	225S/M	250S/M	280S/M	315S/M	315L	355M/L	355A/B
Mechanical features										
Mounting			B3T							
Frame material			FC-200 cast iron							
Degree of protection			IP55							
Grounding			Simple grounding - one earth terminal inside the terminal box	Double grounding - one earth terminal inside the terminal box and another on the motor frame						
Cooling method			Totally enclosed fan cooled - IC411							
Fan material		2p	Polypropylene							Aluminium
		4-12p	Polypropylene							
Fan cover material			FC-200 cast iron							
Endshields material			FC-200 cast iron							
Drain hole	IP55/IP56		Automatic T labyrinth drain plug							
	IP65/IP66		Rubber drain plug							
Bearings	Drive end side	2p	6312-ZZ-C3	6314-C3	6314-C3	6314-C3	6314-C3	6314-C3	6316-C3	6316-C3
		4 - 12p				6316-C3	6319-C3	6319-C3	6322-C3	6322-C3
	Non drive end side	2p	6212-ZZ-C3			6314-C3	6314-C3	6314-C3	6314-C3	6314-C3
		4 - 12p				6316-C3	6316-C3	6316-C3	6319-C3	6319-C3
	Locking		Internal bearing cap at DE with spring washer at NDE	Locked on drive end with internal and external bearing cap and with preload springs on NDE						
Shaft Seal			V' Ring	WSeal®						
Lubrication	Grease Type - 50Hz		Mobil Polyrex EM							
	Grease Type - 60Hz - 2P		Mobil Polyrex EM						Isoflex NBU 15	
	Grease Type - 60Hz - (4P and above)		Mobil Polyrex EM							
	Grease fitting		Without grease fitting	With grease fitting (at DE and NDE)						
Terminal block			BMC terminal block							HGF staggered terminal block
Terminal box material			FC-200 cast iron							
Cable entries	Main	Size	2xM50x1,5		2xM63x1,5			2xM63x1,5 (removable gland plate)	2xM80x2 (removable gland plate)	
	Threaded plug		Plastic plug for transport and storage purposes							
	Accessory	Size	1xM20x1,5 lateral threaded hole when fitted with accessories							
Shaft	Material		SAE 1040/45					SAE 4140		
	DE Threaded hole	2p	M20						M20	
		4 - 12p							M24	
Direction of rotation			Bidirectional							
Vibration level			Grade A							
Nameplate material			Stainless steel AISI 304							
Painting	Type		203 A							
	Performance Criteria		Corrosive category C3 according to DIN EN ISO 12944-2							
	Colour		RAL 5009							
Electrical features										
Design	50Hz e 60Hz (IE1/IE2/IE3)		N							
	60Hz (IE4)									
	50Hz (IE4)		NE							
	50Hz (IE5)		NONE							
Voltage / Frequency			380-415/660//460 V (50 // 60Hz)							
Winding	Impregnation		Dip and bake	Continuous flow impregnation						
	Insulation class		F (DT 80K)							
Service factor	50Hz (IE1, IE2, IE3, IE4, IE5)		1,00							
	60Hz (IE1, IE2)		1,15							1,00
	60Hz (IE3)		1,25						1,15	1,00
	60Hz (IE4)		-					1,25	1,15	1,00
Rotor			Aluminium die cast							
Thermal protection			PTC Thermistor - 155°C							

** Multi-voltage 50/60Hz motors are provided with Mobil Polyrex EM grease as standard. For spot wound, 2 pole, 60Hz motors in frame sizes 355M/L and 355A/B, Kluber Isoflex NBU 15 will be supplied.*

16. Optional Features

Frame	63	71	80	90	100	112	132
Mechanical optionals							
Terminal box							
Auxiliary terminal box (thermal protection)	O	O	O	O	O	O	O
Auxiliary terminal box (heaters)	O*	O*	O*	O*	O*	O*	O
Terminal box with removable gland plate	NA	NA	NA	NA	NA	NA	NA
Oversized Terminal Box	NA	NA	NA	NA	NA	NA	NA
Terminal block							
BMC terminal block - six-pin	S	S	S	S	S	S	S
BMC terminal block - twelve-pin	NA	NA	O	O	O	O	O
HGF staggered terminal block	NA	NA	NA	NA	NA	NA	NA
Cable glands							
Plastic cable gland	O	O	O	O	O	O	O
Brass cable gland	O	O	O	O	O	O	O
Stainless steel cable gland	NA	NA	NA	O	O	O	O
Flange							
Flange FF (IEC)	O	O	O	O	O	O	O
Flange FF (IEC) - superior	O	O	O	O	O	O	O
Flange FF (IEC) - inferior	NA	O	O	O	O	O	O
Flange C-DIN (IEC)	O	O	O	O	O	O	O
Flange C-DIN (IEC) - superior	O	O	O	O	O	O	NA
Flange C-DIN (IEC) - inferior	NA	O	O	O	O	NA	O
Flange C (NEMA)	O	O	O	O	O	O	O
Flange D (NEMA)	O	O	O	O	O	O	O
Flange D (NEMA) - superior	O	O	O	O	O	O	O
Flange D (NEMA) - inferior	NA	O	O	O	O	O	O
Flange C (NEMA) - superior	O	O	O	O	O	NA	O
Flange C (NEMA) - inferior	NA	NA	NA	O	O	O	O
Cooling fan							
Polypropylene (2 pole)	S	S	S	S	S	S	S
Polypropylene (4 pole and above)	S	S	S	S	S	S	S
Conductive plastic (2 pole)	O	O	O	O	O	O	O
Conductive plastic (4 pole and above)	O	O	O	O	O	O	O
Aluminium (2 pole)	O	O	O	O	O	O	O
Aluminium (4 pole and above)	O	O	O	O	O	O	O
Cast iron	O	O	O	O	O	O	O
Bronze	O*	O*	O	O	O	O	O
Bearings							
ZZ ball bearings at both ends	S	S	S	S	S	S	S
ZZ-C3 ball bearings at both ends	O	O	O	O	O	O	O
C3 ball bearings at both ends	NA	NA	NA	NA	NA	NA	NA
2RS ball bearings at both ends	O	O	O	O	O	O	O
Without bearing cap at DE	S	S	S	S	S	S	S
With bearing cap at DE	NA	O	O	O	O	O	O
Roller bearing at DE	NA	NA	NA	NA	NA	NA	O
Shaft sealing							
Nitrillic rubber lip seal	O	O	O	O	O	O	O
Nitrillic rubber oil seal	O	O	O	O	O	O	O
Viton lip seal	O	O	O	O	O	O	O
Viton oil seal	O	O	O	O	O	O	O
Taconite labyrinth	NA	NA	NA	O	O	O	O
W3 Seal® (brass)	NA	NA	NA	O	O	O	O
INPRO/SEAL	NA	NA	NA	O	O	O	O
Other sealing							
Joints sealing with Loctite 5923 (permatex)	O	O	O	O	O	O	O
Bolt sealing with Loctite 5923 (permatex)	O	O	O	O	O	O	O
Degree of protection							
IP56	O	O	O	O	O	O	O
IP65	O	O	O	O	O	O	O
IP66	O	O	O	O	O	O	O

Notes: Other optional features, on request. Some combinations of optional features are not possible - please contact WEG.

S - Standard O - Optional O Optional (feature available upon request for WEG) NA - Not available*

Frame	160	180	200	225S/M	250S/M	280S/M	315S/M	315L	355M/L	355A/B
Mechanical optionals										
Terminal box										
Auxiliary terminal box (thermal protection)	0	0	0	0	0	0	0	0	0	0
Auxiliary terminal box (heaters)	0	0	0	0	0	0	0	0	0	0
Terminal box with removable gland plate	0[1]	0[1]	0[1]	0	0	0	0	S	S	S
Oversized Terminal Box	NA	NA	NA	0	0	0	0	0	0	0
Terminal block										
BMC terminal block - six-pin	S	S	S	S	S	S	S	S	S	NA
BMC terminal block - twelve-pin	0	0	0	0	0	0	0	0	0	NA
HGF staggered terminal block	NA	NA	NA	NA	NA	NA	NA	NA	NA	S
Cable glands										
Plastic cable gland	0	0	0	0	0	0	0	0	0	0
Brass cable gland	0	0	0	0	0	0	0	0	0	0
Stainless steel cable gland	0	0	0	0	0	0	0	0	0	0
Flange										
Flange FF (IEC)	0	0	0	0	0	0	0	0	0	0
Flange FF (IEC) - superior	0	0	0	NA	NA	0	NA	NA	NA	NA
Flange FF (IEC) - inferior	0	0	0	0	0	NA	0	0	NA	NA
Flange C-DIN (IEC)	NA	NA	NA	NA	NA	NA	NA	NA	NA	NA
Flange C-DIN (IEC) - superior	NA	NA	NA	NA	NA	NA	NA	NA	NA	NA
Flange C-DIN (IEC) - inferior	0	NA	NA	NA	NA	NA	NA	NA	NA	NA
Flange C (NEMA)	0	0	0	0	0	0	0	0	0	NA
Flange D (NEMA)	0	0	0	0	0	0	0	0	0	0
Flange D (NEMA) - superior	0	0	0	NA	NA	0	NA	NA	NA	NA
Flange D (NEMA) - inferior	0	0	0	0	0	NA	0	0	NA	NA
Flange C (NEMA) - superior	NA	0	0	NA	NA	0	NA	NA	NA	NA
Flange C (NEMA) - inferior	NA	NA	NA	NA	0	NA	0	0	NA	NA
Cooling fan										
Polypropylene (2 pole)	S	S	S	S	S	S	S	S	S	NA
Polypropylene (4 pole and above)	S	S	S	S	S	S	S	NA	NA	NA
Conductive plastic (2 pole)	0	0	0	0	0	0	0	0	0	NA
Conductive plastic (4 pole and above)	0	0	0	0	0	0	0	NA	NA	NA
Aluminium (2 pole)	0	0	0	0	0	0	0	0	0	S
Aluminium (4 pole and above)	0	0	0	0	0	0	0	S	S	S
Cast iron	0	0	0	0	0	0	0	0	0	0
Bronze	0	0	0	0	0	0	0	0	0	0
Bearings										
ZZ ball bearings at both ends	NA	NA	NA	NA	NA	NA	NA	NA	NA	NA
ZZ-C3 ball bearings at both ends	S	S	S	NA	NA	NA	NA	NA	NA	NA
C3 ball bearings at both ends	NA	NA	NA	S	S	S	S	S	S	S
2RS ball bearings at both ends	NA	NA	NA	NA	NA	NA	NA	NA	NA	NA
Without bearing cap at DE	NA	NA	NA	NA	NA	NA	NA	NA	NA	NA
With bearing cap at DE	S	S	S	S	S	S	S	S	S	S
Roller bearing at DE	0	0	0	0	0	0	0	0	0	0
Shaft sealing										
Nitrillic rubber lip seal	0	0	0	0	0	0	NA	NA	NA	NA
Nitrillic rubber oil seal	0	0	0	0	0	0	NA	NA	NA	NA
Viton lip seal	0	0	0	0	0	0	0	0	0	0
Viton oil seal	0	0	0	0	0	0	0	0	0	0
Taconite labyrinth	0	0	0	0	0	0	0	0	0	0
W3 Seal® (brass)	0	0	0	0	0	0	0	0	0	0
INPRO/SEAL	0	0	0	0	0	0	0	0	0	0
Other sealing										
Joints sealing with Loctite 5923 (permatex)	0	0	0	0	0	0	0	0	0	0
Bolt sealing with Loctite 5923 (permatex)	0	0	0	0	0	0	0	0	0	0
Degree of protection										
IP56	0	0	0	0	0	0	0	0	0	0
IP65	0	0	0	0	0	0	0	0	0	0
IP66	0	0	0	0	0	0	0	0	0	0

1) Option available for motors utilizing W21 terminal box.

Frame	63	71	80	90	100	112	132
Shaft							
AISI 1040/45	S	S	S	S	S	S	S
AISI 4140	O	O	O	O	O	O	O
AISI 304 (stainless steel)	O	O	O	O	O	O	O
AISI 316 (stainless steel)	O	O	O	O	O	O	O
AISI 420 (stainless steel)	O	O	O	O	O	O	O
Shaft locking device (standard for roller bearing motors)	NA	NA	NA	NA	NA	NA	O
Second shaft end	O	O	O	O	O	O	O
Painting plan							
202P Primer: One coat with 20 to 55 µm of alkyd red oxide. Intermediate: One coat with 20 to 30 µm of isocyanate epoxy paint. / Finishing: One coat with 70 to 100 µm of polyurethane paint N2677. / Meets atmospheric corrosive category "C3" as indicated in DIN EN ISO 12944-2.	O	O	O	O	O	O	O
211E Primer: One coat with 100 to 140 µm of epoxy paint N2630. / Finishing: One coat with 100 to 140 µm of epoxy paint N2628. / Meets atmospheric corrosive categories C5 (I and M) as indicated in DIN EN ISO 12944-2.	O	O	O	O	O	O	O
211P Primer: One coat with 100 to 140 µm of epoxy paint N2630. / Finishing: One coat with 70 to 100 µm of polyurethane paint N2677. / Meets atmospheric corrosive categories C5 (I and M) as indicated in DIN EN ISO 12944-2.	O	O	O	O	O	O	O
212E Primer: One coat with 75 to 105 µm of epoxy paint N1277. Intermediate: One coat with 100 to 140 µm of epoxy paint N2630. / Finishing: One coat with 100 to 140 µm of epoxy paint N2628. / Meets atmospheric corrosive categories C5 (I and M) as indicated in DIN EN ISO 12944-2.	O	O	O	O	O	O	O
212P Primer: One coat with 75 to 105 µm of epoxy paint N1277. Intermediate: One coat with 100 to 140 µm of epoxy paint N2630. / Finishing: One coat with 70 to 100 µm of polyurethane paint N2677. / Meets atmospheric corrosive categories C5 (I and M) as indicated in DIN EN ISO 12944-2.	O	O	O	O	O	O	O
213E Primer: One coat with 75 to 90 µm of Silicate Ethyl paint N1661. / Intermediate: One coat with 35 to 50 µm of epoxy paint N1202. / Finishing: One coat with 240 to 340 µm of epoxy paint N2628. / Meets atmospheric corrosive categories C5 (I and M) as indicated in DIN EN ISO 12944-2.	O	O	O	O	O	O	O
Inside of terminal box painted	O	O	O	O	O	O	O
Internal tropical protection - complete	O	O	O	O	O	O	O
Grease / Lubrication							
Grease - Aeroshell 7	O*	O*	O*	O*	O*	O*	O*
Grease - Isoflex NBU-15	O	O	O	O	O	O	O
Grease - Aeroshell 22	O	O	O	O	O	O	O
Carbon steel grease nipple	NA	NA	NA	O	O	O	O
Stainless steel grease nipple	NA	NA	NA	O	O	O	O
Balance and Vibration							
Balance without key	O	O	O	O	O	O	O
Balance with full key	O	O	O	O	O	O	O
Vibration level grade B	O	O	O	O	O	O	O
Provision for vibration detector SPM (1 x hole M8 on DE and NDE shield for vertical reading)	NA	NA	NA	O	O	O	O
Key Type A	S	S	S	S	S	S	S
Key Type B	O*	O*	O*	O*	O*	O*	O*
Key Type C	O*	O*	O*	O*	O	O	O
Drain							
Stainless steel threaded drain plug	O	O	O	O	O	O	O
"T" format threaded drain plug	O	O	O	O	O	O	O

Notes: Other optional features, on request.
Some combinations of optional features are not possible - please contact WEG.
S - Standard O - Optional O Optional (feature available upon request for WEG) NA - Not available*

Frame	160	180	200	225S/M	250S/M	280S/M	315S/M	315L	355M/L	355A/B
Shaft										
AISI 1040/45	S	S	S	S	S	S	S	NA	NA	NA
AISI 4140	0	0	0	0	0	0	0	S	S	S
AISI 304 (stainless steel)	0	0	0	0	0	0	0	0	0	0
AISI 316 (stainless steel)	0	0	0	0	0	0	0	0	0	0
AISI 420 (stainless steel)	0	0	0	0	0	0	0	0	0	0
Shaft locking device (standard for roller bearing motors)	0	0	0	0	0	0	0	0	0	0
Second shaft end	0	0	0	0	0	0	0	0	0	0
Painting plan										
202P Primer: One coat with 20 to 55 µm of alkyd red oxide. Intermediate: One coat with 20 to 30 µm of isocyanate epoxy paint. / Finishing: One coat with 70 to 100 µm of polyurethane paint N2677. / Meets atmospheric corrosive category "C3" as indicated in DIN EN ISO 12944-2.	0	0	0	0	0	0	0	0	0	0
211E Primer: One coat with 100 to 140 µm of epoxy paint N2630. / Finishing: One coat with 100 to 140 µm of epoxy paint N2628. / Meets atmospheric corrosive categories C5 (I and M) as indicated in DIN EN ISO 12944-2.	0	0	0	0	0	0	0	0	0	0
211P Primer: One coat with 100 to 140 µm of epoxy paint N2630. / Finishing: One coat with 70 to 100 µm of polyurethane paint N2677. / Meets atmospheric corrosive categories C5 (I and M) as indicated in DIN EN ISO 12944-2.	0	0	0	0	0	0	0	0	0	0
212E Primer: One coat with 75 to 105 µm of epoxy paint N1277. Intermediate: One coat with 100 to 140 µm of epoxy paint N2630. / Finishing: One coat with 100 to 140 µm of epoxy paint N2628. / Meets atmospheric corrosive categories C5 (I and M) as indicated in DIN EN ISO 12944-2.	0	0	0	0	0	0	0	0	0	0
212P Primer: One coat with 75 to 105 µm of epoxy paint N1277. Intermediate: One coat with 100 to 140 µm of epoxy paint N2630. / Finishing: One coat with 70 to 100 µm of polyurethane paint N2677. / Meets atmospheric corrosive categories C5 (I and M) as indicated in DIN EN ISO 12944-2.	0	0	0	0	0	0	0	0	0	0
213E Primer: One coat with 75 to 90 µm of Silicate Ethyl paint N1661. / Intermediate: One coat with 35 to 50 µm of epoxy paint N1202. / Finishing: One coat with 240 to 340 µm of epoxy paint N2628. / Meets atmospheric corrosive categories C5 (I and M) as indicated in DIN EN ISO 12944-2.	0	0	0	0	0	0	0	0	0	0
Inside of terminal box painted	0	0	0	0	0	0	0	0	0	0
Internal tropical protection - complete	0	0	0	0	0	0	0	0	0	0
Grease / Lubrication										
Grease - Aeroshell 7	0*	0*	0*	0*	0*	0*	0*	0*	0*	0*
Grease - Isoflex NBU-15	0	0	0	0	0	0	0	0	0	0
Grease - Aeroshell 22	0	0	0	0	0	0	0	0	0	0
Carbon steel grease nipple	0	0	0	S	S	S	S	S	S	S
Stainless steel grease nipple	0	0	0	0	0	0	0	0	0	0
Balance and Vibration										
Balance without key	0	0	0	0	0	0	0	0	0	0
Balance with full key	0	0	0	0	0	0	0	0	0	0
Vibration level grade B	0	0	0	0	0	0	0	0	0	0
Provision for vibration detector SPM (1 x hole M8 on DE and NDE shield for vertical reading)	0	0	0	0	0	0	0	0	0	0
Key Type A	S	S	S	0*	0*	0*	0*	0*	0*	0*
Key Type B	0*	0*	0*	S	S	S	S	S	S	S
Key Type C	0	0	0	0	0	0	0	0	0	0
Drain										
Stainless steel threaded drain plug	0	0	0	0	0	0	0	0	0	0
"T" format threaded drain plug	0	0	0	0	0	0	0	0	0	0

Notes: Other optional features, on request.
Some combinations of optional features are not possible - please contact WEG.
S - Standard O - Optional O Optional (feature available upon request for WEG) NA - Not available*

Frame	63	71	80	90	100	112	132
Grounding							
Double grounding (one inside terminal box and another on the motor frame)	0	0	0	0	0	0	0
Triple grounding (one inside terminal box, two on the motor frame)	NA	NA	0	0	0	0	0
Nameplates							
Second main nameplate (loose)	0	0	0	0	0	0	0
Additional / Tag plate	0	0	0	0	0	0	0
VSD rating plate	0	0	0	0	0	0	0
Direction of Rotation plate	0	0	0	0	0	0	0
Other mechanical optionals							
Drip cover (recommended for vertical shaft down applications)	0	0	0	0	0	0	0
Rubber slinger (recommended for vertical shaft up applications)	NA	NA	NA	0	0	0	0
Stainless steel hardware	0	0	0	0	0	0	0
Grease outlet through the endshield	NA	NA	NA	0*	0*	0*	0*
Without cooling fan - IC 418 (TEAO) or IC 410 (TENV)	0*	0*	0*	0*	0*	0*	0*
Loose leads in lieu of t/box (up to 2 metres)	0	0	0	0	0	0	0
Electrical optionals							
Winding thermal protection							
Thermostat - alarm / trip (NO or NC) - 130 °C	0	0	0	0	0	0	0
Thermostat - alarm / trip (NO or NC) - 155 °C	0	0	0	0	0	0	0
Thermostat - trip (NO or NC) - 180 °C	0	0	0	0	0	0	0
Pt-100 two wires, one per phase	0	0	0	0	0	0	0
Pt-100 two wires, two per phase	0	0	0	0	0	0	0
Pt-100 three wires, one per phase	0	0	0	0	0	0	0
Pt-100 three wires, two per phase	0	0	0	0	0	0	0
PTC Thermistor - alarm/trip (130 °C)	0	0	0	0	0	0	0
PTC Thermistor - alarm/trip (155 °C)	0	0	0	0	0	0	0
PTC Thermistor - trip (180 °C)	0	0	0	0	0	0	0
Bearing thermal protection							
Thermostat, one per bearing	NA	NA	NA	0*	0*	0*	0*
PTC Thermistor, one per bearing	NA	NA	NA	0*	0*	0*	0*
Pt-100 two wires, one per bearing	NA	NA	NA	0*	0*	0*	0*
Pt-100 three wires, one per bearing	NA	NA	NA	0*	0*	0*	0*
Pt-100 three wires (calibrated)	NA	NA	NA	0*	0*	0*	0*
Space heaters							
110-127 V	0	0	0	0	0	0	0
220-240 V	0	0	0	0	0	0	0
110-127 / 220-240 V	0	0	0	0	0	0	0
380-480 V	0	0	0	0	0	0	0
Service factor							
Service factor 1,15	0	0	0	0	0	0	0
Insulation class							
H	0	0	0	0	0	0	0
Variable Speed Options							
Forced ventilation kit with encoder provision (inform auxiliary motor voltage)	NA	NA	NA	0	0	0	0
Forced ventilation kit without encoder provision (inform auxiliary motor voltage)	NA	NA	NA	0	0	0	0
Encoder	NA	NA	NA	0	0	0	0
DE side shaft grounding brush	NA	NA	NA	NA	NA	NA	NA
NDE side shaft grounding brush	NA	NA	NA	NA	NA	NA	NA
Insulated DE ball bearing	NA	NA	NA	NA	NA	NA	NA
Insulated NDE ball bearing	NA	NA	NA	NA	NA	NA	NA
Insulated DE bearing hub	NA	NA	NA	NA	NA	NA	NA
Insulated NDE bearing hub	NA	NA	NA	NA	NA	NA	NA

Notes: Other optional features, on request.
Some combinations of optional features are not possible - please contact WEG.
S - Standard O - Optional O Optional (feature available upon request for WEG) NA - Not available*

Frame	160	180	200	225S/M	250S/M	280S/M	315S/M	315L	355M/L	355A/B
Grounding										
Double grounding (one inside terminal box and another on the motor frame)	0	0	0	S	S	S	S	S	S	S
Triple grounding (one inside terminal box, two on the motor frame)	0	0	0	0	0	0	0	0	0	0
Nameplates										
Second main nameplate (loose)	0	0	0	0	0	0	0	0	0	0
Additional / Tag plate	0	0	0	0	0	0	0	0	0	0
VSD rating plate	0	0	0	0	0	0	0	0	0	0
Direction of Rotation plate	0	0	0	0	0	0	0	0	0	0
Other mechanical optionals										
Drip cover (recommended for vertical shaft down applications)	0	0	0	0	0	0	0	0	0	0
Rubber slinger (recommended for vertical shaft up applications)	0	0	0	0	0	0	0	0	0	0
Stainless steel hardware	0	0	0	0	0	0	0	0	0	0
Grease outlet through the endshield	0*	0*	0*	0	0	0	0	0	0	0
Without cooling fan - IC 418 (TEAO) or IC 410 (TENV)	0*	0*	0*	0*	0*	0*	0*	0*	0*	0*
Loose leads in lieu of t/box (up to 2 metres)	0	0	0	0	0	0	0	0	0	0
Electrical optionals										
Winding thermal protection										
Thermostat - alarm / trip (NO or NC) - 130 °C	0	0	0	0	0	0	0	0	0	0
Thermostat - alarm / trip (NO or NC) - 155 °C	0	0	0	0	0	0	0	0	0	0
Thermostat - trip (NO or NC) - 180 °C	0	0	0	0	0	0	0	0	0	0
Pt-100 two wires, one per phase	0	0	0	0	0	0	0	0	0	0
Pt-100 two wires, two per phase	0	0	0	0	0	0	0	0	0	0
Pt-100 three wires, one per phase	0	0	0	0	0	0	0	0	0	0
Pt-100 three wires, two per phase	0	0	0	0	0	0	0	0	0	0
PTC Thermistor - alarm/trip (130 °C)	0	0	0	0	0	0	0	0	0	0
PTC Thermistor - alarm/trip (155 °C)	S	S	S	S	S	S	S	S	S	S
PTC Thermistor - trip (180 °C)	0	0	0	0	0	0	0	0	0	0
Bearing thermal protection										
Thermostat	0	0	0	0	0	0	0	0	0	0
PTC Thermistor	0	0	0	0	0	0	0	0	0	0
Pt-100 two wires, one per bearing	0	0	0	0	0	0	0	0	0	0
Pt-100 three wires, one per bearing	0	0	0	0	0	0	0	0	0	0
Pt-100 three wires (calibrated)	0	0	0	0	0	0	0	0	0	0
Space heaters										
110-127 V	0	0	0	0	0	0	0	0	0	0
220-240 V	0	0	0	0	0	0	0	0	0	0
110-127 / 220-240 V	0	0	0	0	0	0	0	0	0	0
380-480 V	0	0	0	0	0	0	0	0	0	0
Service factor										
Service factor 1,15	0	0	0	0	0	0	0	0	0	0
Insulation class										
H	0	0	0	0	0	0	0	0	0	0
Variable Speed Options										
Forced ventilation kit with encoder provision (inform auxiliary motor voltage)	0	0	0	0	0	0	0	0	0	0
Forced ventilation kit without encoder provision (inform auxiliary motor voltage)	0	0	0	0	0	0	0	0	0	0
Encoder	0	0	0	0	0	0	0	0	0	0
DE side shaft grounding brush	NA	NA	NA	0*	0*	0*	0	0	0	0
NDE side shaft grounding brush	NA	NA	NA	0	0	0	0	0	0	0
Insulated DE ball bearing	NA	NA	NA	0	0	0	0	0	0	0
Insulated NDE ball bearing	NA	NA	NA	0	0	0	0	0	0	0
Insulated DE bearing hub	NA	NA	NA	0	0	0	0	0	0	0
Insulated NDE bearing hub	NA	NA	NA	0	0	0	S	S	S	S

Notes: Other optional features, on request.
Some combinations of optional features are not possible - please contact WEG.
S - Standard O - Optional O Optional (feature available upon request for WEG) NA - Not available*

17. Electrical Data

W22 - Super Premium Efficiency - IE4 (50Hz)

Output		Frame	Full Load Torque	Locked Rotor Current	Locked Rotor Torque	Break-down Torque	Inertia J (kgm²)	Allowable locked rotor time (s)		Weight (kg)	Sound dB(A)	400 V							
												Rated speed	% of full load						Full load current
													Efficiency			Power Factor			
kW	HP		(Nm)	Il/In	Tl/Tn	Tb/Tn		Hot	Cold			(rpm)	50	75	100	50	75	100	In (A)
II Poles																			
0,12	0,16	63	0,40	7,1	5,8	5,4	0,0002	40	88	8,7	52	2880	61,1	66,5	66,5	0,40	0,52	0,61	0,43
0,18	0,25	63	0,60	6,6	4,5	4,4	0,0002	22	48	8,9	52	2870	61,9	68,1	70,8	0,42	0,54	0,64	0,57
0,25	0,33	63	0,86	8,0	3,0	2,6	0,0002	12	26	8,7	52	2785	67,5	70,8	74,3	0,56	0,70	0,79	0,62
0,37	0,5	71	1,24	7,6	2,9	3,1	0,0005	16	35	11,2	56	2850	75,7	78,1	78,1	0,61	0,74	0,82	0,83
0,55	0,75	71	1,84	7,4	3,7	3,7	0,0005	17	37	11,6	56	2850	77,3	80,2	81,5	0,57	0,71	0,80	1,22
0,75	1	80	2,49	8,2	3,5	3,6	0,0009	17	37	15,5	59	2875	79,5	82,0	83,5	0,57	0,70	0,79	1,64
1,1	1,5	L80	3,67	8,4	4,2	3,9	0,0011	19	42	17	59	2860	82,7	84,3	85,2	0,59	0,72	0,80	2,33
1,5	2	L90S	4,97	8,7	3,5	3,4	0,0023	16	35	22,6	62	2885	84,9	86,2	86,5	0,67	0,78	0,84	2,98
2,2	3	L90L	7,27	9,1	4,2	3,9	0,0030	14	31	25,6	62	2890	86,2	87,5	88,0	0,66	0,77	0,83	4,35
3	4	L100L	9,87	9,2	3,0	3,6	0,0070	15	33	34	67	2905	88,6	89,1	89,1	0,75	0,84	0,88	5,52
4	5,5	112M	13,20	9,1	2,8	3,8	0,0094	17	37	44,6	62	2905	88,7	89,9	90,0	0,69	0,80	0,85	7,55
5,5	7,5	132S	17,80	9,1	2,6	3,8	0,0206	19	42	66	63	2945	88,0	89,9	90,9	0,67	0,78	0,84	10,40
7,5	10	L132S	24,40	9,3	3,0	3,8	0,0267	18	40	75	63	2940	89,3	90,9	91,7	0,70	0,81	0,85	13,90
9,2	12,5	132M/L	29,90	9,7	2,9	3,7	0,0339	16	35	84,7	63	2940	90,1	91,4	92,2	0,74	0,83	0,87	16,60
11	15	160M	35,60	9,3	2,9	3,9	0,0588	17	37	124	67	2955	91,2	92,3	92,6	0,70	0,80	0,85	20,20
15	20	160L	48,50	9,6	3,2	4,0	0,0767	15	33	142	67	2955	92,2	93,1	93,3	0,72	0,82	0,86	27,00
18,5	25	180L	59,70	9,5	3,4	3,3	0,1138	23	51	179	67	2960	92,7	93,6	93,7	0,74	0,82	0,86	33,10
22	30	180L	71,00	9,5	3,5	3,5	0,1225	17	37	187	67	2960	92,9	93,7	94,0	0,68	0,78	0,83	40,70
30	40	200L	96,50	9,0	3,4	3,5	0,2284	27	59	263	72	2970	92,8	93,9	94,5	0,70	0,80	0,84	54,50
37	50	225S/M	119,00	9,2	2,8	3,4	0,3757	28	62	412	74	2970	92,9	94,0	94,8	0,78	0,85	0,88	64,00
45	60	250S/M	145,00	9,2	3,2	3,4	0,5038	32	70	484	74	2970	93,2	94,3	95,0	0,76	0,84	0,87	78,60
55	75	250S/M	177,00	8,1	3,2	3,2	0,6068	35	77	530	74	2970	93,7	94,6	95,3	0,79	0,86	0,89	93,60
75	100	280S/M	240,00	8,3	2,5	3,2	1,5109	36	79	670	77	2981	93,6	94,8	95,6	0,75	0,83	0,86	132,00
90	125	280S/M	289,00	8,4	2,3	3,0	1,5998	32	70	710	77	2979	94,3	95,2	95,8	0,78	0,85	0,88	154,00
110	150	315S/M	353,00	8,0	2,1	2,9	2,3439	46	101	920	77	2980	94,0	95,5	96,0	0,76	0,84	0,87	190,00
132	175	315S/M	423,00	8,3	2,7	3,3	2,5570	42	92	1020	77	2983	95,1	95,9	96,2	0,79	0,85	0,88	225,00
150	200	315S/M	481,00	8,0	2,3	2,9	3,0522	35	77	1030	77	2980	95,2	96,0	96,3	0,78	0,85	0,88	255,00
160	220	315S/M	513,00	8,4	2,8	3,0	3,0522	36	79	1135	77	2983	95,4	96,2	96,3	0,80	0,86	0,89	269,00
185	250	315L	593,00	6,8	2,4	2,6	3,1267	36	79	1200	78	2979	95,4	96,1	96,5	0,82	0,88	0,89	311,00
200	270	315L	641,00	8,6	2,8	3,3	3,2756	27	59	1225	78	2983	95,4	96,2	96,5	0,77	0,85	0,88	340,00
220	300	315L	706,00	7,7	2,4	2,4	3,9255	36	79	1400	78	2978	95,7	96,4	96,5	0,85	0,89	0,90	366,00
250	340	315L	801,00	9,2	2,8	2,6	4,0200	26	57	1413	78	2983	95,7	96,4	96,5	0,81	0,87	0,89	420,00
260	350	315L	833,00	7,7	2,7	2,8	4,0736	27	59	1430	78	2982	95,8	96,5	96,5	0,82	0,88	0,90	432,00
280	380	355M/L	896,00	8,4	2,8	2,8	6,0053	36	79	1817	80	2986	95,6	96,2	96,5	0,86	0,89	0,90	465,00
300	400	355M/L	960,00	8,9	2,6	2,6	6,0053	30	66	1815	80	2985	95,8	96,2	96,5	0,87	0,90	0,91	493,00
315	430	355M/L	1008,00	8,4	3,1	3,0	6,0053	27	59	1820	80	2985	95,8	96,2	96,5	0,86	0,90	0,91	518,00
355	480	355A/B	1136,00	8,8	3,3	2,9	7,7211	30	66	2240	83	2986	96,5	96,5	96,5	0,86	0,90	0,90	590,00
IV Poles																			
0,12	0,16	63	0,80	8,4	4,0	4,1	0,0007	23	51	8,8	44	1435	55,9	63,5	69,8	0,36	0,46	0,55	0,45
0,18	0,25	71	1,20	8,4	3,5	3,7	0,0008	27	59	11,3	43	1435	67,7	73,1	74,7	0,37	0,48	0,57	0,61
0,25	0,33	71	1,69	6,7	3,0	3,0	0,0007	43	95	11,3	43	1410	72,9	76,2	77,9	0,43	0,55	0,65	0,71
0,37	0,5	L80	2,44	8,2	2,7	3,2	0,0037	18	40	16,9	44	1450	76,5	79,5	81,1	0,56	0,69	0,78	0,84
0,55	0,75	L80	3,64	8,6	3,8	4,0	0,0039	25	55	17,6	44	1445	79,8	82,2	83,9	0,56	0,69	0,78	1,21
0,75	1	90S	4,91	8,1	2,7	3,5	0,0049	21	46	20,8	49	1460	82,1	84,6	85,7	0,51	0,65	0,74	1,71
1,1	1,5	L90L	7,22	8,3	2,8	3,4	0,0071	20	44	24,6	49	1455	85,1	86,7	87,2	0,56	0,69	0,77	2,36
1,5	2	100L	9,92	8,6	3,3	3,1	0,0097	30	66	33,4	53	1445	87,3	88,2	88,2	0,60	0,72	0,79	3,11
2,2	3	112M	14,40	7,8	2,2	3,0	0,0169	40	88	43,5	56	1460	89,3	89,5	89,5	0,61	0,73	0,79	4,49
3	4	L112M	19,60	9,0	2,9	3,6	0,0195	23	51	46,5	56	1465	88,9	90,0	90,4	0,55	0,68	0,76	6,30
4	5,5	132M	25,90	8,0	2,7	3,5	0,0488	30	66	67,7	56	1475	89,2	90,6	91,1	0,55	0,68	0,76	8,34
5,5	7,5	132M	35,60	8,1	2,7	3,3	0,0657	26	57	78,3	56	1475	90,2	91,4	91,9	0,58	0,70	0,78	11,10
7,5	10	160M	48,40	8,7	2,8	3,2	0,1121	25	55	120	61	1480	91,1	92,3	92,6	0,62	0,74	0,80	14,60
9,2	12,5	160M	59,40	8,1	2,7	3,2	0,1319	24	53	131	61	1479	91,6	92,8	93,0	0,58	0,71	0,78	18,30
11	15	160L	71,00	8,7	2,9	3,2	0,1607	22	48	144	61	1480	92,1	93,1	93,3	0,63	0,75	0,81	21,00
15	20	180M	96,80	8,8	3,3	3,7	0,1910	20	44	180	61	1480	92,6	93,6	93,9	0,62	0,74	0,80	28,80
18,5	25	180L	120,00	9,1	3,5	3,7	0,2263	17	37	196	61	1479	92,9	93,8	94,2	0,63	0,75	0,81	35,00
22	30	200L	142,00	8,7	3,0	3,3	0,3202	21	46	241	63	1483	93,3	94,3	94,5	0,61	0,73	0,79	42,50
30	40	225S/M	193,00	8,7	2,7	3,3	0,7078	30	66	405	63	1484	94,1	94,8	94,9	0,66	0,77	0,83	55,00
37	50	225S/M	238,00	8,6	2,7	3,3	0,7322	26	57	413	63	1483	94,4	95,0	95,2	0,67	0,78	0,83	67,60
45	60	250S/M	289,00	9,2	2,9	3,3	1,0757	22	48	491	64	1486	94,7	95,2	95,4	0,68	0,79	0,84	81,10
55	75	250S/M	354,00	8,4	3,1	3,5	1,2046	18	40	520	64	1486	94,8	95,3	95,7	0,65	0,76	0,82	101,00
75	100	280S/M	481,00	7,7	2,6	2,8	2,8540	34	75	735	69	1489	95,3	95,8	96,0	0,70	0,80	0,83	136,00
90	125	280S/M	578,00	8,0	2,7	2,9	2,8540	31	68	790	69	1489	95,5	96,0	96,1	0,71	0,80	0,84	161,00
110	150	315S/M	705,00	7,0	2,6	2,8	2,8735	36	79	935	71	1491	95,4	96,0	96,3	0,69	0,79	0,83	199,00
132	175	315S/M	846,00	7,3	2,7	2,9	3,2050	32	70	980	71	1491	95,4	96,1	96,4	0,68	0,78	0,83	238,00
150	200	315S/M	961,00	8,0	3,0	3,0	4,4207	39	86	1040	71	1491	95,5	96,1	96,5	0,66	0,77	0,83	270,00
160	220	315S/M	1025,00	8,1	3,0	3,0	5,0838	25	55	1110	71	1491	95,9	96,4	96,6	0,71	0,80	0,85	281,00
185	250	315L	1186,00	7,1	2,8	2,7	4,6310	35	77	1225	73	1490	96,1	96,6	96,7	0,72	0,81	0,85	325,00
200	270	315L	1282,00	7,6	3,0	2,8	4,9618	26	57	1255	73	1491	95,8	96,5	96,7	0,70	0,80	0,84	355,00
220	300	355M/L	1408,00	7,0	2,6	2,6	8,9494	49	108	1680	76	1493	95,4	96,3	96,7	0,71	0,80	0,84	391,00
250	340	355M/L	1601,00	7,4	2,2	2,2	8,9494	44	97	1690	76	1492	95,6	96,3	96,7	0,74	0,82	0,85	439,00
260	350	355M/L	1666,00	7,5	2,6	2,6	9,8443	40	88	1765	76	1491	95,7	96,4	96,7	0,76	0,83	0,86	451,00
280	380	355M/L	1793,00	7,3	2,7	2,8	9,8242	25	55	1775	76	1492	95,6	96,4	96,7	0,70	0,79	0,83	504,00
300	400	355M/L	1923,00	7,2	2,4	2,1	10,7173	26	57	1860	76	1491	95,9	96,5	96,7	0,73	0,81	0,85	527,00
315	430	355M/L	2016,00	7,2	2,7	2,4	10,7173	26	57	1870	76	1493	95,7	96,4	96,7	0,70	0,79	0,83	566,00
330	450	355A/B	2115,00	7,2	2,6	2,6	13,9325	32	70	2330	76	1491	96,4	96,7	96,7	0,76	0,83	0,86	573,00
355	480	355A/B	2273,00	8,0	2,6	2,1	14,6470	27	59	2405	76	1492	96,4	96,7	96,7	0,75	0,83	0,86	616,00

Note: IE1 and IE2 motors available under request.

W22 - Super Premium Efficiency - IE4 (50Hz)

Output		Frame	Full Load Torque (Nm)	Locked Rotor Current Il/In	Locked Rotor Torque Tl/Tn	Break-down Torque Tb/Tn	Inertia J (kgm²)	Allowable locked rotor time (s)		Weight (kg)	Sound dB(A)	400 V							
												Rated speed	% of full load						Full load current
													Efficiency			Power Factor			
kW	HP							Hot	Cold			(rpm)	50	75	100	50	75	100	In (A)
VI Poles																			
0,12	0,16	71	1,23	5,5	2,3	2,0	0,0008	20	44	11,3	43	930	57,3	63,2	64,9	0,33	0,42	0,51	0,52
0,18	0,25	80	1,81	7,0	2,4	2,7	0,0019	19	42	13,2	43	950	62,8	68,0	70,1	0,41	0,53	0,63	0,59
0,25	0,33	80	2,51	6,4	2,4	2,6	0,0024	24	53	14,2	43	950	68,9	72,5	74,1	0,45	0,58	0,68	0,72
0,37	0,5	90S	3,68	5,2	2,3	2,5	0,0044	41	90	19,5	45	960	74,8	77,4	78,0	0,46	0,59	0,68	1,01
0,55	0,75	90S	5,47	5,8	2,8	2,7	0,0055	41	90	21,6	45	960	78,5	80,3	80,9	0,46	0,59	0,69	1,42
0,75	1	L90L	7,46	6,2	3,0	3,0	0,0077	36	79	25,3	45	960	79,8	81,5	82,7	0,45	0,58	0,67	1,95
1,1	1,5	132S	10,70	7,2	2,1	3,0	0,0416	128	282	62,3	53	981	84,5	84,5	84,5	0,44	0,56	0,65	2,89
1,5	2	132S	14,60	7,0	2,2	3,0	0,0491	113	249	67,1	53	980	85,4	85,9	85,9	0,43	0,56	0,64	3,94
2,2	3	132S	21,50	7,1	2,2	2,8	0,0566	84	185	71,8	53	976	86,5	87,4	87,4	0,47	0,59	0,68	5,34
3	4	L132S	29,40	7,1	2,2	2,5	0,0643	69	152	77,1	53	975	87,0	88,3	88,6	0,51	0,63	0,71	6,88
4	5,5	132M	39,20	7,7	2,8	2,9	0,0679	43	95	79,1	53	975	86,9	88,4	89,5	0,47	0,60	0,69	9,35
5,5	7,5	160M	53,60	7,0	2,5	3,2	0,1229	25	55	112	57	980	88,8	90,3	90,5	0,54	0,67	0,75	11,70
7,5	10	160M	73,10	7,4	2,8	3,4	0,1664	22	48	128	57	981	89,3	90,8	91,3	0,52	0,66	0,74	16,00
9,2	12,5	160L	89,60	7,8	2,9	3,5	0,2107	20	44	263	57	981	89,9	91,3	91,8	0,54	0,68	0,76	19,00
11	15	180M	107,00	7,8	2,6	3,4	0,2835	18	40	172	56	982	91,2	92,0	92,3	0,57	0,71	0,78	22,10
15	20	200L	146,00	7,3	2,4	3,0	0,3693	25	55	223	60	984	91,8	92,8	92,9	0,59	0,72	0,78	29,90
18,5	25	200L	180,00	7,4	2,5	3,0	0,4563	16	35	248	60	984	92,3	93,2	93,4	0,58	0,71	0,78	36,70
22	30	225S/M	213,00	8,8	2,8	3,5	0,8169	27	59	367	63	989	93,5	93,7	93,7	0,59	0,72	0,79	42,90
30	40	225S/M	290,00	8,3	2,6	3,2	1,0211	26	57	406	63	988	94,1	94,2	94,2	0,63	0,75	0,81	56,70
37	50	250S/M	359,00	7,5	2,2	2,6	1,6538	35	77	510	64	986	94,5	94,5	94,5	0,72	0,81	0,85	66,50
45	60	280S/M	435,00	7,6	2,2	2,8	2,4709	35	77	625	65	989	94,3	94,8	94,8	0,65	0,76	0,81	84,60
55	75	280S/M	531,00	7,6	2,3	2,7	3,2496	27	59	705	65	990	94,7	95,1	95,1	0,65	0,76	0,81	103,00
75	100	315S/M	722,00	7,3	2,5	2,8	5,0838	38	84	905	67	993	94,0	95,0	95,4	0,61	0,73	0,80	142,00
90	125	315S/M	867,00	7,0	2,4	2,7	5,6056	35	77	950	67	992	94,8	95,3	95,6	0,61	0,73	0,80	170,00
110	150	315L	1058,00	7,0	2,5	2,7	8,8605	40	88	1165	68	993	95,0	95,7	95,8	0,65	0,77	0,82	202,00
132	175	315L	1271,00	7,1	2,5	2,6	9,5838	40	88	1240	68	992	95,2	95,9	96,0	0,66	0,78	0,81	245,00
150	200	315L	1445,00	7,1	2,5	2,7	10,3071	34	75	1310	68	992	95,3	95,9	96,1	0,67	0,77	0,82	275,00
160	220	315L	1540,00	7,5	2,7	2,8	11,0304	30	66	1350	68	993	95,2	95,9	96,2	0,65	0,75	0,81	296,00
185	250	355M/L	1778,00	5,7	2,0	2,2	11,7868	50	110	1570	73	994	94,8	95,8	96,3	0,64	0,75	0,80	347,00
200	270	355M/L	1923,00	6,7	2,1	2,3	11,7868	50	110	1585	73	994	94,8	95,7	96,3	0,63	0,74	0,79	379,00
220	300	355M/L	2117,00	6,6	2,0	2,4	14,5602	40	88	1910	73	993	94,7	95,6	96,3	0,61	0,74	0,79	417,00
250	340	355M/L	2403,00	6,6	2,1	2,5	13,8402	44	97	1858	73	994	94,8	95,8	96,5	0,60	0,72	0,77	486,00
260	350	355M/L	2502,00	6,3	2,1	2,4	13,8402	44	97	1860	73	993	94,9	95,9	96,5	0,62	0,73	0,78	499,00
280	380	355M/L	2692,00	6,6	2,2	2,5	14,9936	39	86	1948	73	994	94,8	95,8	96,5	0,60	0,71	0,77	544,00
300	400	355A/B	2887,00	6,2	1,8	2,0	18,9150	50	110	2420	73	993	95,5	96,2	96,6	0,67	0,77	0,81	553,00
315	430	355A/B	3028,00	6,9	2,1	2,2	19,6070	46	101	2475	73	994	95,2	96,1	96,6	0,63	0,74	0,79	596,00
VIII Poles																			
0,12	0,16	80	1,60	5,9	2,4	2,6	0,0032	35	77	16	42	715	51,7	58,7	62,3	0,35	0,45	0,53	0,53
0,18	0,25	90S	2,39	5,0	1,8	2,5	0,0044	49	108	19,6	44	720	58,2	64,5	67,2	0,36	0,46	0,54	0,72
0,25	0,33	90S	3,34	4,1	1,8	2,3	0,0052	20	44	21	44	715	62,5	67,7	70,8	0,38	0,48	0,57	0,89
0,37	0,5	L90L	4,94	4,0	1,9	2,4	0,0077	20	44	25,3	44	715	69,0	72,9	74,3	0,38	0,49	0,58	1,24
0,55	0,75	100L	7,30	4,5	2,0	2,5	0,0099	72	158	28	50	720	71,3	76,1	77,0	0,35	0,46	0,56	1,84
0,75	1	100L	10,00	4,4	1,9	2,3	0,0127	60	132	31	50	715	73,7	77,6	78,4	0,37	0,49	0,58	2,38
1,1	1,5	L100L	14,70	4,6	2,1	2,2	0,0176	60	132	36,6	50	715	77,9	80,5	80,8	0,40	0,52	0,61	3,22
1,5	2	132S	20,00	6,4	2,1	2,7	0,0592	43	95	64,4	48	715	82,1	82,6	82,6	0,47	0,60	0,69	3,80
2,2	3	160M	28,60	5,6	2,5	3,1	0,0878	47	103	98	51	736	81,8	84,5	84,5	0,37	0,50	0,59	6,37
3	4	160M	39,30	4,9	1,8	2,3	0,1053	48	106	104	51	730	85,3	85,9	85,9	0,47	0,60	0,68	7,41
4	5,5	160M	52,30	5,1	2,0	2,5	0,1141	34	75	108	51	731	84,3	86,4	87,1	0,44	0,57	0,66	10,00
5,5	7,5	160M	71,90	5,3	2,1	2,5	0,1668	31	68	128	51	731	86,0	87,6	88,3	0,46	0,59	0,67	13,40
7,5	10	180M	97,90	6,9	2,2	2,9	0,2299	16	35	156	52	732	88,3	89,3	89,3	0,52	0,66	0,74	16,40
9,2	12,5	180M	120,00	7,2	2,2	2,9	0,2846	15	33	171	52	731	89,3	89,9	89,9	0,55	0,68	0,76	19,40
11	15	180L	144,00	7,6	2,5	3,0	0,3252	14	31	184	52	732	89,6	90,4	90,4	0,55	0,68	0,76	23,10
15	20	200L	195,00	4,8	1,9	2,1	0,5285	45	99	266	56	735	91,2	91,2	91,2	0,56	0,67	0,73	32,50
18,5	25	225S/M	240,00	8,0	2,1	2,5	0,6547	23	51	336	56	737	91,1	91,7	91,7	0,61	0,73	0,78	37,30
22	30	225S/M	285,00	8,2	2,3	2,8	0,7214	18	40	349	56	737	90,8	91,9	92,1	0,55	0,68	0,75	46,00
30	40	250S/M	391,00	8,4	2,1	3,1	1,1995	18	40	440	56	734	92,6	92,7	92,7	0,62	0,74	0,80	58,40
37	50	280S/M	477,00	6,0	1,9	2,3	2,2566	37	81	595	59	741	92,6	93,1	93,1	0,57	0,69	0,74	77,50
45	60	280S/M	579,00	6,6	2,0	2,5	2,7079	30	66	642	59	742	92,5	93,3	93,4	0,53	0,65	0,72	96,60
55	75	315S/M	708,00	6,2	1,7	2,1	4,0271	42	92	859	62	742	93,7	93,7	93,7	0,63	0,73	0,78	109,00
75	100	315S/M	966,00	6,7	1,9	2,3	5,4915	32	70	974	62	742	94,2	94,2	94,2	0,62	0,73	0,78	147,00
90	125	315S/M	1157,00	7,2	2,2	2,5	6,5898	30	66	1061	62	743	94,4	94,4	94,4	0,60	0,71	0,77	179,00
110	150	315L	1418,00	6,1	1,7	2,2	7,8392	36	79	1217	68	741	94,6	94,7	94,7	0,65	0,75	0,79	212,00
132	175	355M/L	1698,00	6,3	1,6	2,2	9,8011	30	66	1330	70	743	93,9	94,8	94,9	0,61	0,72	0,77	261,00
150	200	355M/L	1924,00	7,4	1,9	2,6	13,1702	31	68	1528	70	745	94,0	95,0	95,1	0,58	0,70	0,76	300,00
160	220	355M/L	2055,00	6,5	1,6	2,2	12,5576	31	68	1493	70	744	94,2	95,1	95,1	0,63	0,73	0,78	311,00
185	250	355M/L	2376,00	6,6	1,6	2,1	16,5393	36	79	1727	70	744	94,7	95,3	95,3	0,66	0,76	0,80	350,00
200	270	355M/L	2569,00	7,2	1,9	2,4	18,9895	32	70	1871	70	744	94,5	95,4	95,4	0,62	0,73	0,78	388,00
220	300	355M/L	2829,00	6,5	1,6	2,0	19,9084	32	70	1926	70	743	94,8	95,4	95,4	0,68	0,77	0,81	411,00
250	340	355A/B	3211,00	7,5	2,0	2,6	21,6684	25	55	2187	70	744	94,4	95,4	95,4	0,58	0,70	0,76	498,00
260	350	355A/B	3339,00	7,3	1,9	2,5	21,6684	26	57	2192	70	744	94,5	95,4	95,4	0,59	0,71	0,77	511,00
280	380	355A/B	3596,00	7,4	1,8	2,4	25,1152	28	62	2388	70	744	94,7	95,4	95,4	0,63	0,74	0,79	536,00

Note: IE1 and IE2 motors available under request.

W22 - Super Premium Efficiency - IE4 (60Hz)

Output		Frame	Full Load Torque (Nm)	Locked Rotor Current Il/In	Locked Rotor Torque Tl/Tn	Break-down Torque Tb/Tn	Inertia J (kgm²)	Allowable locked rotor time (s)		Weight (kg)	Sound dB(A)	400V							
												Rated speed	% of full load						Full load current
													Efficiency			Power Factor			
kW	HP							Hot	Cold			(rpm)	50	75	100	50	75	100	In (A)
II Poles																			
0,12	0,16	63	0,34	10,3	2,9	3,0	0,0001	15	7	7,5	56	3410	54,4	61,4	66,0	0,50	0,61	0,71	0,37
0,18	0,25	63	0,50	9,9	2,9	2,9	0,0002	13	6	8	56	3420	59,6	65,7	70,0	0,52	0,64	0,74	0,50
0,25	0,33	63	0,70	8,4	2,9	3,1	0,0003	20	9	9	56	3420	65,2	70,2	74,0	0,54	0,67	0,76	0,64
0,37	0,5	63	1,05	6,1	3,9	3,2	0,0002	37	17	9	56	3375	69,9	73,6	77,0	0,56	0,69	0,79	0,88
0,55	0,75	71	1,53	7,5	2,7	2,9	0,0005	26	12	11	60	3435	75,6	78,5	80,0	0,63	0,76	0,83	1,20
0,75	1	71	2,09	7,6	3,8	3,5	0,0005	31	14	12	60	3430	78,3	81,0	82,5	0,61	0,74	0,82	1,60
1,1	1,5	80	3,04	9,1	4,2	4,1	0,0010	35	16	16	62	3460	81,2	83,7	85,5	0,60	0,72	0,80	2,32
1,5	2	L80	4,15	9,2	4,5	4,2	0,0012	35	16	18	62	3455	83,3	85,1	86,5	0,62	0,75	0,82	3,05
2,2	3	L90L	6,01	10,3	4,5	4,5	0,0028	31	14	25	68	3495	85,7	87,7	88,5	0,64	0,76	0,82	4,38
3	4	100L	8,14	10,7	3,1	4,5	0,0070	22	10	33	71	3520	87,0	89,0	89,5	0,70	0,81	0,86	5,62
3,7	5	100L	10,10	10,3	3,2	4,4	0,0064	18	8	32	71	3510	86,9	88,9	89,5	0,67	0,79	0,85	7,02
4,5	6	112M	12,20	9,7	3,1	4,1	0,0094	24	11	42	66	3515	85,6	87,9	89,5	0,64	0,76	0,83	8,75
5,5	7,5	112M	15,00	9,8	3,3	4,3	0,0094	26	12	45	66	3510	86,5	88,7	90,2	0,64	0,76	0,83	10,60
7,5	10	132S	20,20	9,3	2,7	3,8	0,0249	44	20	72	68	3540	88,3	90,2	91,7	0,71	0,81	0,86	13,80
9,2	12,5	132M	24,80	9,8	2,9	3,8	0,0286	26	12	76	68	3540	88,3	90,2	91,7	0,71	0,81	0,86	16,80
11	15	132M	29,70	9,7	3,2	3,8	0,0303	33	15	80	68	3540	89,0	90,7	92,4	0,70	0,81	0,85	20,20
15	20	160M	40,30	10,2	3,4	4,3	0,0661	15	7	125	72	3560	90,2	91,6	92,4	0,66	0,78	0,83	28,30
18,5	25	160M	49,90	8,3	2,8	3,3	0,0698	26	12	135	72	3540	92,0	92,7	93,0	0,77	0,85	0,88	32,70
22	30	160L	59,20	10,1	3,4	3,9	0,0813	20	9	145	72	3550	92,2	93,0	93,0	0,75	0,84	0,87	39,30
30	40	200M	80,30	8,3	3,1	3,3	0,1945	31	14	230	76	3570	91,8	93,0	93,6	0,69	0,79	0,84	55,10
37	50	200L	98,90	9,9	3,5	3,9	0,2214	22	10	245	76	3575	91,8	93,2	94,1	0,64	0,75	0,81	70,10
45	60	225S/M	120,00	9,3	2,8	3,3	0,2991	42	19	370	79	3570	92,5	93,8	94,5	0,76	0,84	0,87	79,00
55	75	225S/M	147,00	9,3	2,9	3,3	0,3627	35	16	405	79	3570	93,2	94,2	94,5	0,77	0,85	0,88	95,50
75	100	280S/M	200,00	8,4	2,0	2,5	0,9776	84	38	647	81	3575	93,6	94,7	95,0	0,81	0,87	0,88	130,00
90	125	280S/M	241,00	8,5	1,9	2,3	1,0665	62	28	671	81	3570	94,1	95,0	95,4	0,83	0,88	0,89	153,00
110	150	280S/M	294,00	8,5	2,2	2,6	1,1621	53	24	694	81	3575	94,4	95,2	95,4	0,83	0,88	0,89	187,00
132	175	315S/M	353,00	8,4	2,0	2,7	1,8141	70	32	921	81	3577	94,9	95,8	95,8	0,81	0,86	0,88	226,00
150	200	315S/M	401,00	8,6	1,9	2,4	2,3314	66	30	1025	81	3575	95,6	95,8	95,8	0,85	0,89	0,90	251,00
185	250	315S/M	494,00	8,7	2,6	2,8	2,9778	64	29	1151	81	3579	96,0	96,2	96,2	0,83	0,88	0,90	308,00
200	270	315L	534,00	8,7	2,8	2,7	3,9456	90	41	1396	82	3581	94,8	95,9	96,2	0,85	0,89	0,90	333,00
220	300	315L	587,00	8,7	2,6	2,6	3,6292	70	32	1341	82	3579	95,0	95,9	96,2	0,84	0,89	0,90	366,00
250	340	315L	667,00	8,6	3,2	3,1	3,9456	64	29	1399	82	3583	95,0	96,0	96,2	0,81	0,87	0,89	421,00
260	350	315L	694,00	8,1	3,0	3,0	4,0736	62	28	1428	82	3582	95,1	96,1	96,2	0,81	0,88	0,89	438,00
300	400	355M/L	800,00	8,8	2,7	2,0	6,0053	88	40	1817	84	3585	95,5	96,2	96,2	0,87	0,90	0,91	495,00
330	450	355M/L	880,00	8,8	2,5	1,6	6,0053	64	29	1817	84	3583	95,7	96,2	96,2	0,88	0,91	0,91	545,00
370	500	355M/L	985,00	9,5	3,3	3,6	6,0053	53	24	1819	84	3588	95,8	96,2	96,2	0,81	0,86	0,88	630,00
IV Poles																			
0,12	0,16	63	0,67	10,4	2,4	2,7	0,0005	26	12	8	48	1705	58,9	65,1	70,0	0,47	0,58	0,68	0,36
0,18	0,25	63	1,02	8,0	2,1	2,2	0,0006	40	18	8,5	48	1680	66,5	70,3	74,0	0,50	0,63	0,72	0,49
0,25	0,33	71	1,40	6,1	2,7	3,0	0,0007	77	35	11	47	1710	70,7	74,8	77,0	0,42	0,54	0,63	0,74
0,37	0,5	71	2,07	5,9	3,5	3,5	0,0009	141	64	12	47	1710	76,4	79,5	81,5	0,42	0,54	0,64	1,03
0,55	0,75	80	3,03	8,5	3,5	3,4	0,0030	48	22	16	48	1735	79,3	82,0	84,0	0,54	0,68	0,77	1,23
0,75	1	90S	4,06	8,9	2,9	4,1	0,0055	33	15	21	51	1765	80,1	83,7	85,5	0,47	0,60	0,70	1,80
1,1	1,5	L90S	5,99	8,5	2,8	3,4	0,0060	40	18	23	51	1755	84,7	86,6	87,5	0,58	0,70	0,78	2,32
1,5	2	100L	8,19	9,4	3,4	3,5	0,0082	44	20	31	54	1750	85,6	87,4	88,5	0,56	0,69	0,76	3,22
2,2	3	112M	11,90	8,8	2,4	3,6	0,0182	86	39	45	56	1765	88,0	89,8	91,0	0,57	0,70	0,77	4,53
3	4	132S	16,10	8,3	2,5	3,3	0,0453	68	31	64	58	1775	88,7	90,2	91,0	0,61	0,73	0,79	6,03
3,7	5	132S	19,90	9,1	2,9	3,6	0,0528	44	20	68	58	1778	88,3	90,1	91,0	0,57	0,70	0,77	7,62
4,5	6	132S	24,30	7,6	2,3	2,8	0,0528	53	24	69	58	1770	89,7	90,7	91,0	0,65	0,76	0,82	8,70
5,5	7,5	132S	29,70	10,3	2,5	4,1	0,0526	35	16	70	58	1770	90,6	91,8	92,4	0,61	0,73	0,80	10,70
7,5	10	L132S	40,50	10,5	2,6	3,9	0,0601	24	11	75	58	1770	91,0	92,0	92,4	0,62	0,75	0,81	14,40
9,2	12,5	132M/L	49,80	10,6	2,7	3,9	0,0657	20	9	78	58	1765	91,1	92,1	92,4	0,63	0,75	0,82	17,50
11	15	160M	59,10	8,9	3,1	3,3	0,1467	53	24	135	64	1779	92,2	93,3	93,6	0,64	0,76	0,82	20,70
15	20	180M	80,50	8,8	3,1	3,3	0,1740	57	26	170	63	1781	92,4	93,6	94,1	0,65	0,75	0,82	28,10
18,5	25	180M	99,30	9,5	3,6	3,9	0,2161	42	19	190	63	1780	92,8	93,9	94,5	0,59	0,72	0,79	35,80
22	30	180L	118,00	9,7	3,6	4,0	0,2248	33	15	195	63	1779	92,8	93,9	94,5	0,59	0,72	0,79	42,60
30	40	200M	161,00	8,7	3,1	3,3	0,3588	44	20	255	66	1782	93,7	94,6	95,0	0,62	0,74	0,80	57,00
37	50	225S/M	198,00	9,9	3,2	3,5	0,6389	51	23	385	67	1785	94,1	95,0	95,4	0,67	0,78	0,83	67,40
45	60	225S/M	241,00	9,2	3,2	3,4	0,6367	37	17	385	67	1783	94,2	95,0	95,4	0,66	0,77	0,82	83,10
55	75	250S/M	294,00	9,7	3,4	3,5	1,0085	37	17	475	68	1786	94,5	95,3	95,8	0,65	0,77	0,82	101,00
75	100	280S/M	401,00	8,1	2,1	2,5	2,3912	106	48	745	73	1787	95,3	95,9	96,2	0,73	0,81	0,84	134,00
90	125	280S/M	481,00	8,2	2,2	2,4	2,7909	90	41	804	73	1787	95,6	96,0	96,2	0,77	0,83	0,85	158,00
110	150	280S/M	589,00	8,1	2,2	2,4	2,5327	53	24	768	73	1785	95,6	96,0	96,2	0,72	0,81	0,84	197,00
132	175	315S/M	705,00	8,2	2,3	2,4	2,8735	64	29	939	75	1789	95,8	96,3	96,5	0,74	0,82	0,85	232,00
150	200	315S/M	801,00	8,2	2,5	2,4	3,0873	51	23	967	75	1789	95,9	96,4	96,5	0,73	0,82	0,85	264,00
160	220	315S/M	855,00	8,3	2,6	2,6	3,7489	51	23	1052	75	1789	96,3	96,5	96,5	0,74	0,84	0,86	278,00
185	250	315S/M	988,00	8,4	2,7	2,5	4,2191	48	22	1108	75	1789	96,2	96,5	96,5	0,78	0,85	0,87	318,00
200	270	315L	1068,00	8,5	2,7	2,4	4,7742	59	27	1237	77	1789	95,7	96,2	96,5	0,79	0,86	0,88	340,00
220	300	315L	1174,00	8,4	2,8	2,5	5,1943	57	26	1293	77	1790	95,8	96,4	96,8	0,76	0,84	0,87	377,00
250	340	315L	1335,00	8,4	2,8	2,5	5,8574	53	24	1378	77	1789	96,0	96,4	96,8	0,77	0,85	0,87	429,00
260	350	315L	1389,00	8,4	2,8	2,5	5,6364	46	21	1350	77	1789	95,9	96,4	96,8	0,77	0,85	0,87	446,00
300	400	355M/L	1600,00	8,1	2,7	2,4	8,1998	62	28	1601	81	1791	95,4	96,2	96,8	0,72	0,81	0,84	532,00
330	450	355M/L	1761,00	8,2	2,3	2,1	9,4476	55	25	1728	81	1791	95,6	96,4	96,8	0,75	0,83	0,85	579,00
370	500	355M/L	1975,00	8,1	2,6	2,2	8,9128	44	20	1675	81	1790	95,6	96,4	96,8	0,73	0,81	0,84	657,00
400	550	355M/L	2134,00	8,1	2,4	2,2	9,6258	48	22	1751	81	1791	95,7	96,4	96,8	0,72	0,81	0,84	710,00

Notes:
(1) Efficiency values are given according to IEC 60034-2-1. They are calculated according to indirect method, with stray load losses determined by measurement.
(2) With effect from 1st July 2021, motors placed onto the UK or European Markets and rated at 0.75kW up to 1,000kW, must meet the minimum efficiency class IE3. Motors rated between 0.12kW and 0.55kW must meet the minimum efficiency class IE2. With effect from 1st July 2023, motors rated at 75kW up to 200kW, 2, 4 and 6 poles must meet the minimum efficiency class IE4.
(3) Motor with class F (105K) temperature rise.
(4) Fitted with air deflector in the drive end side.
IE1 and IE2 motors available under request.

W22 - Super Premium Efficiency - IE4 (60Hz)

Output		Frame	Full Load Torque (Nm)	Locked Rotor Current Il/In	Locked Rotor Torque Tl/Tn	Break-down Torque Tb/Tn	Inertia J (kgm²)	Allowable locked rotor time (s)		Weight (kg)	Sound dB(A)	400V							
												Rated speed (rpm)	% of full load						Full load current In (A)
													Efficiency			Power Factor			
kW	HP							Hot	Cold				50	75	100	50	75	100	
VI Poles																			
0,12	0,16	71	1,01	5,6	2,2	2,3	0,0008	163	74	11	47	1140	57,0	62,5	68,0	0,31	0,40	0,48	0,53
0,18	0,25	80	1,49	8,6	2,1	2,8	0,0026	33	15	14	47	1155	64,6	69,6	72,0	0,47	0,59	0,68	0,53
0,25	0,33	80	2,10	6,0	2,2	2,5	0,0025	59	27	15	47	1140	70,4	73,5	75,5	0,47	0,60	0,69	0,69
0,37	0,5	L80	3,09	5,6	2,7	2,9	0,0034	77	35	16	47	1145	72,7	75,9	78,5	0,44	0,57	0,67	1,02
0,55	0,75	90S	4,53	6,5	2,8	3,2	0,0052	84	38	21	50	1160	78,2	81,0	82,5	0,43	0,56	0,65	1,49
0,75	1	L90L	6,23	5,8	2,1	2,3	0,0077	117	53	25	50	1150	82,4	83,6	84,0	0,55	0,68	0,75	1,72
1,1	1,5	112M	8,98	7,1	2,2	3,0	0,0293	200	91	48	52	1170	84,7	87,2	88,5	0,46	0,59	0,67	2,67
1,5	2	132S	12,10	8,5	2,3	3,6	0,0530	249	113	69	55	1183	85,2	87,8	89,5	0,42	0,54	0,63	3,84
2,2	3	132M	17,80	7,8	2,0	3,1	0,0643	251	114	77	55	1180	87,0	88,9	90,2	0,46	0,58	0,67	5,26
3	4	132S	24,40	7,8	2,4	3,1	0,0566	143	65	72	55	1176	87,7	89,2	90,2	0,47	0,59	0,68	7,06
3,7	5	L132S	30,00	8,5	2,9	3,4	0,0643	103	47	77	55	1177	87,7	89,3	90,2	0,47	0,59	0,67	8,83
4,5	6	132M	36,60	8,1	2,7	3,1	0,0681	95	43	79	55	1175	88,3	89,6	90,2	0,50	0,63	0,70	10,30
5,5	7,5	160M	44,40	8,2	3,0	3,6	0,1580	73	33	125	59	1183	90,3	91,7	91,7	0,53	0,67	0,75	11,60
7,5	10	160M	60,50	8,5	3,5	4,2	0,1839	51	23	135	59	1184	90,0	91,7	92,4	0,49	0,63	0,72	16,30
9,2	12,5	160M	74,60	7,5	2,8	3,2	0,1668	48	22	130	59	1179	90,6	91,8	92,4	0,56	0,69	0,77	18,70
11	15	160L	89,00	7,8	3,0	3,3	0,2195	48	22	150	59	1181	91,2	92,3	93,0	0,57	0,70	0,77	22,20
15	20	180M	121,00	10,2	3,1	4,0	0,2565	18	8	165	59	1180	91,4	92,4	93,0	0,59	0,73	0,80	29,20
18,5	25	200L	149,00	7,3	2,4	2,9	0,4563	66	30	250	62	1185	92,8	93,7	94,1	0,61	0,73	0,79	36,00
22	30	200L	178,00	7,2	2,5	3,0	0,4722	55	25	255	62	1184	92,6	93,6	94,1	0,57	0,70	0,77	43,80
30	40	225S/M	241,00	9,9	3,2	3,4	1,0211	55	25	405	66	1189	93,5	94,5	95,0	0,61	0,73	0,80	57,00
37	50	225S/M	298,00	9,3	3,2	3,2	1,0211	44	20	405	66	1188	93,8	94,6	95,0	0,63	0,75	0,81	69,40
45	60	250S/M	362,00	9,9	3,7	3,5	1,6466	53	24	510	68	1189	94,1	94,9	95,4	0,61	0,73	0,80	85,10
55	75	280S/M	442,00	8,3	2,5	3,1	2,5773	59	27	636	69	1190	94,3	95,0	95,4	0,61	0,73	0,79	105,00
75	100	280S/M	603,00	7,9	2,4	2,8	4,2581	70	32	812	69	1189	95,3	95,7	95,8	0,67	0,77	0,82	138,00
90	125	280S/M	724,00	7,9	2,4	2,7	4,1461	53	24	803	69	1188	95,4	95,7	95,8	0,67	0,77	0,82	165,00
110	150	315S/M	882,00	7,8	2,3	2,7	5,9794	75	34	1020	70	1192	95,5	96,0	96,2	0,66	0,76	0,81	204,00
132	175	315S/M	1058,00	7,8	2,2	2,5	6,1606	57	26	1036	70	1192	95,6	96,0	96,2	0,67	0,77	0,81	244,00
150	200	315L	1203,00	8,0	2,3	2,5	8,3180	66	30	1265	71	1191	95,2	95,8	96,2	0,70	0,79	0,83	272,00
160	220	315L	1284,00	8,0	2,4	2,5	8,3180	59	27	1266	71	1191	95,1	95,8	96,2	0,69	0,79	0,83	289,00
185	250	355M/L	1480,00	7,6	1,9	2,3	9,2623	95	43	1491	77	1194	94,6	95,6	96,2	0,65	0,75	0,79	351,00
200	270	355M/L	1603,00	7,8	1,6	2,0	9,9570	77	35	1546	77	1192	95,0	95,7	96,2	0,70	0,79	0,81	371,00
220	300	355M/L	1762,00	7,7	1,9	2,2	11,7868	101	46	1699	77	1193	95,0	95,9	96,5	0,66	0,76	0,80	411,00
260	350	355M/L	2081,00	7,5	2,2	2,5	13,4046	95	43	1819	77	1194	94,8	95,8	96,5	0,62	0,73	0,78	498,00
300	400	355M/L	2401,00	7,6	2,1	2,3	14,5602	77	35	1911	77	1194	95,0	95,9	96,5	0,64	0,74	0,79	568,00
330	450	355M/L	2643,00	7,7	1,9	2,1	14,5602	57	26	1911	77	1193	95,2	96,0	96,5	0,67	0,76	0,80	617,00
370	500	355M/L	2963,00	7,6	2,0	2,1	15,0224	55	25	1953	77	1193	95,1	95,9	96,5	0,65	0,75	0,79	701,00
VIII Poles																			
0,12	0,16	80	1,34	3,9	2,2	2,2	0,0027	180	82	15	46	855	51,0	58,0	64,0	0,36	0,46	0,55	0,49
0,18	0,25	80	2,01	4,9	2,1	2,3	0,0029	97	44	15	46	855	57,3	63,1	68,0	0,38	0,49	0,58	0,66
0,25	0,33	90S	2,75	3,9	1,5	2,5	0,0052	154	70	21	48	870	65,2	69,6	72,0	0,35	0,46	0,55	0,91
0,37	0,5	L90S	4,09	4,3	2,0	2,7	0,0055	152	69	22	48	865	69,9	73,5	75,5	0,34	0,44	0,53	1,33
0,55	0,75	90L	6,11	4,2	1,8	2,2	0,0069	141	64	24	48	860	74,8	76,7	77,0	0,38	0,50	0,59	1,75
0,75	1	100L	8,19	4,9	2,1	2,7	0,0154	95	43	33	54	875	72,6	77,4	78,5	0,34	0,45	0,54	2,55
1,1	1,5	100L	12,20	4,7	1,9	2,2	0,0143	125	57	33	54	860	79,1	81,5	81,5	0,40	0,52	0,61	3,19
1,5	2	132M	16,40	7,3	2,2	3,0	0,0592	103	47	64	52	875	82,3	84,5	85,5	0,44	0,57	0,66	3,84
2,2	3	132M/L	24,00	7,5	2,0	2,9	0,1036	130	59	86	52	875	84,7	86,4	87,5	0,45	0,58	0,67	5,41
3	4	160M	32,20	6,5	3,4	3,8	0,1668	141	64	125	54	889	84,4	87,6	88,5	0,35	0,47	0,57	8,58
3,7	5	160M	40,00	5,1	2,1	2,4	0,1756	180	82	130	54	883	88,0	88,5	88,5	0,49	0,60	0,69	8,75
4,5	6	160M	48,70	5,6	2,4	2,8	0,1317	81	37	115	54	883	86,0	88,2	88,5	0,43	0,56	0,65	11,30
5,5	7,5	160M	60,10	4,4	1,6	2,0	0,1756	121	55	130	54	875	88,5	88,5	88,5	0,55	0,67	0,73	12,30
7,5	10	160L	81,20	5,9	2,5	2,9	0,2282	88	40	150	54	883	87,9	89,8	91,0	0,44	0,57	0,66	18,00
9,2	12,5	180M	99,70	8,0	2,4	3,0	0,2308	33	15	155	54	882	89,1	90,3	91,0	0,56	0,69	0,76	19,30
11	15	180L	119,00	9,0	3,0	3,5	0,2851	24	11	170	54	884	88,5	90,1	91,0	0,51	0,65	0,73	23,90
15	20	180L	163,00	7,9	2,7	3,1	0,3666	29	13	195	54	881	89,8	90,9	91,7	0,59	0,70	0,77	30,70
18,5	25	200L	200,00	5,0	1,8	2,1	0,4396	64	29	240	56	884	90,5	91,3	91,7	0,52	0,64	0,71	41,00
22	30	225S/M	237,00	7,4	2,0	2,8	0,6860	57	26	340	60	886	92,3	92,9	93,0	0,61	0,73	0,78	43,80
30	40	225S/M	323,00	8,0	2,3	3,2	0,8232	40	18	370	60	887	92,1	92,8	93,0	0,57	0,70	0,76	61,30
37	50	280S/M	397,00	7,7	1,7	2,3	2,0310	55	25	571	63	891	92,6	93,6	93,6	0,58	0,69	0,75	76,10
45	60	280S/M	483,00	7,6	1,7	2,3	2,0310	42	19	573	63	890	92,5	93,3	93,6	0,57	0,68	0,74	93,70
55	75	280S/M	589,00	7,7	1,9	2,4	2,8208	55	25	656	63	892	93,2	94,0	94,5	0,57	0,68	0,74	113,00
75	100	280S/M	804,00	7,2	1,9	2,3	3,7234	48	22	748	63	891	93,6	94,3	94,5	0,60	0,71	0,76	151,00
90	125	315S/M	965,00	7,6	1,5	1,8	5,6630	51	23	988	66	891	95,0	95,0	95,0	0,68	0,77	0,80	171,00
110	150	315L	1180,00	7,6	1,7	2,1	7,8392	64	29	1217	71	891	94,4	95,0	95,0	0,67	0,76	0,80	209,00
132	175	315L	1414,00	7,5	2,0	2,4	9,2976	75	34	1332	71	892	94,4	95,3	95,4	0,64	0,74	0,79	253,00
150	200	355M/L	1607,00	7,8	1,1	1,9	11,6387	51	23	1439	75	892	94,8	95,4	95,4	0,72	0,79	0,82	277,00
185	250	355M/L	1982,00	5,0	1,0	1,6	15,9267	106	48	1689	75	892	95,1	95,4	95,4	0,74	0,81	0,82	341,00
220	300	355M/L	2354,00	7,7	1,4	2,2	17,1518	55	25	1763	75	893	95,0	95,4	95,4	0,68	0,77	0,81	411,00
260	350	355M/L	2779,00	7,4	1,5	2,6	19,2269	70	32	1907	75	894	94,7	95,7	95,8	0,60	0,71	0,77	508,00
300	400	355A/B	3206,00	7,3	2,0	2,6	22,6649	59	27	2250	75	894	95,0	95,8	95,8	0,64	0,74	0,79	572,00
330	450	355A/B	3523,00	7,0	2,2	3,1	25,9875	59	27	2455	75	895	94,4	95,6	95,8	0,54	0,66	0,73	681,00

Note: IE1 and IE2 motors available under request.

W22 - Premium Efficiency - IE3 (50Hz)

Output		Frame	Full Load Torque (Nm)	Locked Rotor Current	Locked Rotor Torque	Break-down Torque	Inertia J (kgm²)	Allowable locked rotor time (s)		Weight (kg)	Sound dB(A)	400 V-							
												Rated speed	% of full load						Full load current
													Efficiency			Power Factor			
kW	HP			Il/In	Tl/Tn	Tb/Tn		Hot	Cold			(rpm)	50	75	100	50	75	100	In (A)
II Poles																			
0,12	0,16	63	0,40	5,4	3,5	3,8	0,0001	70	32	6,9	52	2875	58,0	60,8	64,5	0,50	0,61	0,69	0,39
0,18	0,25	63	0,60	5,4	3,0	3,2	0,0002	48	22	8	52	2855	61,0	65,9	65,9	0,50	0,61	0,71	0,56
0,25	0,33	63	0,85	5,5	2,6	2,7	0,0002	22	10	7,9	52	2820	63,0	68,0	69,7	0,54	0,68	0,77	0,67
0,37	0,5	71	1,24	5,8	2,3	2,5	0,0004	26	12	10,5	56	2840	69,5	73,8	73,8	0,60	0,74	0,83	0,87
0,55	0,75	71	1,86	5,8	2,4	2,6	0,0005	33	15	11	56	2825	75,0	76,0	77,8	0,67	0,79	0,86	1,19
0,75	1	80	2,51	7,5	3,2	3,2	0,0008	40	18	14,1	59	2860	80,0	82,0	81,0	0,60	0,73	0,81	1,65
1,1	1,5	80	3,71	6,8	3,8	3,3	0,0009	35	16	15	59	2835	81,5	82,7	82,7	0,60	0,73	0,80	2,40
1,5	2	90S	4,97	7,0	2,5	3,0	0,0020	22	10	21,5	62	2885	82,0	83,5	84,2	0,62	0,74	0,81	3,17
2,2	3	90L	7,29	7,5	3,5	3,6	0,0026	20	9	24,5	62	2885	83,0	85,9	85,9	0,62	0,73	0,80	4,62
3	4	100L	9,83	8,0	2,4	3,3	0,0064	20	9	35	67	2915	85,0	86,5	87,1	0,67	0,79	0,85	5,85
4	5,5	112M	13,10	7,7	2,5	3,5	0,0081	22	10	41	62	2910	87,0	88,4	88,4	0,65	0,77	0,83	7,87
5,5	7,5	132S	17,90	7,9	2,3	3,2	0,0180	26	12	62	63	2940	86,9	88,7	89,4	0,66	0,78	0,84	10,60
7,5	10	132S	24,40	8,5	2,8	3,3	0,0234	20	9	70	63	2935	88,5	89,8	90,2	0,68	0,80	0,85	14,10
9,2	12,5	132M	30,00	8,5	2,8	3,5	0,0303	29	13	84	63	2935	88,0	90,0	90,7	0,76	0,84	0,88	16,60
11	15	160M	35,50	8,5	3,1	3,8	0,0482	18	8	115	67	2960	89,0	91,0	91,2	0,65	0,76	0,83	21,00
15	20	160M	48,60	8,3	2,8	3,6	0,0551	18	8	120	67	2950	90,9	91,8	92,0	0,67	0,79	0,85	27,70
18,5	25	160L	59,80	8,5	3,1	3,7	0,0663	15	7	135	67	2955	91,5	92,3	92,4	0,69	0,80	0,85	34,00
22	30	180M	71,00	8,3	3,2	3,2	0,0968	20	9	170	67	2960	92,0	92,7	92,7	0,69	0,80	0,86	39,80
30	40	200L	96,50	7,8	3,3	3,2	0,1703	35	16	235	72	2970	92,2	93,2	93,3	0,69	0,80	0,85	54,60
37	50	200L	119,00	7,7	3,3	3,3	0,2368	22	10	250	72	2970	92,6	93,4	93,7	0,69	0,79	0,84	67,90
45	60	225S/M	145,00	8,3	2,9	3,7	0,2861	18	8	380	74	2970	92,0	93,0	94,0	0,72	0,82	0,86	80,30
55	75	250S/M	177,00	8,0	2,8	3,3	0,3736	20	9	460	74	2968	93,3	94,0	94,3	0,75	0,83	0,86	97,90
75	100	280S/M	241,00	7,4	2,0	3,1	0,9386	44	20	680	77	2978	92,5	94,0	94,7	0,75	0,83	0,86	133,00
90	125	280S/M	289,00	7,1	2,1	2,9	1,1173	59	27	710	77	2976	93,8	94,5	95,0	0,79	0,85	0,88	155,00
110	150	315S/M	353,00	7,5	1,9	2,8	1,6629	97	44	900	77	2978	94,3	95,3	95,4	0,78	0,85	0,87	191,00
132	175	315S/M	423,00	7,7	2,2	3,0	1,9553	77	35	950	77	2980	94,0	95,0	95,4	0,75	0,83	0,87	230,00
150	200	315S/M	481,00	7,8	2,3	3,0	2,1809	44	20	1050	77	2979	95,0	95,6	95,6	0,80	0,86	0,89	254,00
160	220	315S/M	513,00	7,5	2,2	2,9	2,2446	62	28	1080	77	2980	94,8	95,6	95,6	0,79	0,86	0,88	275,00
185	250	315S/M	594,00	7,6	2,3	3,1	2,4566	48	22	1110	77	2978	95,4	95,8	95,8	0,79	0,86	0,88	317,00
200	270	315L	641,00	7,6	2,2	2,4	2,6799	59	27	1200	78	2980	95,0	95,5	95,8	0,82	0,88	0,89	339,00
220	300	315L	705,00	8,5	2,4	3,1	3,1265	51	23	1320	78	2981	95,8	96,0	96,0	0,81	0,87	0,89	372,00
250	340	315L	802,00	7,5	2,4	2,5	3,5732	46	21	1350	78	2980	95,5	96,0	96,0	0,83	0,89	0,90	418,00
260	350	315L	832,00	8,1	2,6	2,5	3,5732	44	20	1370	78	2985	96,0	96,0	96,0	0,80	0,87	0,89	439,00
280	380	315L	897,00	7,5	2,5	2,8	4,1687	48	22	1550	78	2982	95,4	95,8	96,0	0,84	0,89	0,91	463,00
300	400	355M/L	960,00	8,0	2,3	2,9	5,5761	48	22	1850	80	2985	95,4	95,8	96,0	0,84	0,89	0,91	496,00
315	430	355M/L	1009,00	7,7	2,6	2,7	6,0051	51	23	1950	80	2983	95,5	96,0	96,0	0,87	0,90	0,91	520,00
330	450	355M/L	1058,00	7,7	2,3	2,5	6,0051	62	28	1950	80	2980	95,2	95,8	96,0	0,87	0,90	0,91	545,00
355	480	355M/L	1135,00	9,5	3,0	3,2	6,0051	31	14	1950	80	2988	95,3	95,6	95,8	0,82	0,88	0,90	594,00
370	500	355A/B	1184,00	7,9	2,5	2,8	6,7600	88	40	2046	83	2985	95,8	96,1	96,4	0,85	0,89	0,90	616,00
400	550	355A/B	1281,00	8,2	2,7	2,9	6,7600	68	31	2250	83	2984	95,8	96,2	96,4	0,85	0,89	0,91	658,00
450	610	355A/B	1442,00	7,5	2,8	2,7	7,4000	68	31	2400	83	2982	95,8	96,2	96,4	0,85	0,90	0,91	740,00
IV Poles																			
0,12	0,16	63	0,81	4,4	2,3	2,5	0,0004	114	52	5,2	44	1425	57,0	63,0	64,8	0,52	0,62	0,71	0,38
0,18	0,25	63	1,25	4,6	2,2	2,2	0,0006	66	30	7,2	44	1380	65,0	67,0	69,9	0,53	0,63	0,72	0,52
0,25	0,33	71	1,69	4,8	2,4	2,4	0,0009	66	30	8	43	1410	69,0	72,0	73,5	0,52	0,62	0,72	0,68
0,37	0,5	71	2,55	4,8	2,8	2,7	0,0008	66	30	9,5	43	1385	73,0	75,0	77,3	0,50	0,62	0,70	0,99
0,55	0,75	80	3,69	6,6	2,8	2,8	0,0027	53	24	12,5	44	1425	77,0	79,0	80,8	0,61	0,74	0,80	1,23
0,75	1	80	4,99	7,0	3,6	3,6	0,0032	40	18	14,5	44	1435	78,0	81,0	82,5	0,54	0,68	0,78	1,68
1,1	1,5	90S	7,27	6,6	2,3	2,7	0,0055	35	16	19,5	49	1445	83,0	84,1	84,1	0,59	0,72	0,79	2,39
1,5	2	90L	9,88	7,4	2,9	3,2	0,0066	24	11	23	49	1450	82,0	84,0	85,3	0,55	0,68	0,76	3,34
2,2	3	100L	14,60	7,8	3,5	3,4	0,0090	40	18	31,5	53	1435	86,5	87,0	87,0	0,59	0,72	0,79	4,62
3	4	L100L	19,90	7,8	3,9	3,2	0,0120	33	15	37,5	53	1440	87,0	88,0	88,0	0,60	0,73	0,80	6,15
4	5,5	112M	26,40	7,1	2,7	3,2	0,0180	33	15	44	56	1450	87,5	88,2	88,6	0,53	0,69	0,75	8,69
5,5	7,5	132S	36,00	8,3	2,3	3,1	0,0491	24	11	66	56	1460	89,0	89,6	89,7	0,66	0,76	0,82	10,80
7,5	10	132M	48,90	8,5	2,5	3,5	0,0563	20	9	74	56	1465	89,0	90,4	90,4	0,63	0,76	0,82	14,60
9,2	12,5	132M/L	60,00	8,6	2,8	3,5	0,0698	18	8	82	56	1465	89,0	90,5	91,0	0,64	0,76	0,82	17,80
11	15	160M	71,10	8,0	2,7	3,0	0,1191	29	13	113	61	1479	90,7	91,6	91,4	0,65	0,77	0,83	20,90
15	20	160L	97,20	7,0	2,7	3,0	0,1534	24	11	140	61	1475	92,0	92,5	92,3	0,66	0,77	0,83	28,30
18,5	25	180M	120,00	7,5	3,0	3,2	0,1740	18	8	191	61	1476	91,8	92,6	92,6	0,64	0,76	0,82	35,20
22	30	180L	142,00	7,7	3,3	3,4	0,2097	24	11	208	61	1478	92,3	93,0	93,2	0,66	0,77	0,83	41,00
30	40	200L	194,00	7,5	2,8	3,1	0,3202	20	9	228	63	1480	92,9	93,6	93,6	0,63	0,75	0,81	57,10
37	50	225S/M	238,00	7,7	2,8	3,3	0,5177	22	10	365	63	1485	93,0	93,9	93,9	0,65	0,76	0,82	69,40
45	60	225S/M	290,00	7,8	2,8	3,1	0,6733	18	8	400	63	1485	93,5	94,1	94,2	0,65	0,77	0,82	84,10
55	75	250S/M	355,00	7,7	2,7	3,0	1,0498	35	16	500	64	1482	94,3	94,6	94,6	0,69	0,80	0,85	98,70
75	100	280S/M	482,00	7,5	2,2	2,7	2,0877	44	20	630	69	1487	94,5	95,0	95,0	0,68	0,77	0,82	139,00
90	125	280S/M	578,00	7,3	2,5	2,9	2,1652	44	20	700	69	1488	94,0	95,0	95,2	0,65	0,76	0,81	168,00
110	150	315S/M	706,00	7,0	2,1	2,4	2,8933	62	28	950	71	1489	94,7	95,4	95,4	0,69	0,78	0,83	201,00
132	175	315S/M	846,00	7,5	2,5	2,6	3,7921	44	20	1010	71	1490	95,1	95,6	95,6	0,74	0,82	0,85	234,00
150	200	315S/M	962,00	7,0	2,6	2,6	3,7748	59	27	1030	71	1490	95,4	95,8	95,8	0,73	0,82	0,85	266,00
160	220	315S/M	1026,00	7,7	2,5	2,7	3,9876	57	26	1080	71	1490	95,2	95,8	95,8	0,73	0,82	0,85	284,00
185	250	315S/M	1186,00	7,8	2,9	2,9	4,4205	55	25	1150	71	1491	95,5	95,9	95,9	0,71	0,80	0,85	328,00
200	270	315L	1283,00	7,2	2,7	2,8	4,7520	44	20	1300	73	1490	95,5	96,0	96,0	0,70	0,80	0,84	358,00
220	300	315L	1411,00	7,5	2,8	2,7	5,3046	26	12	1340	73	1490	95,8	96,1	96,2	0,72	0,81	0,85	388,00
250	340	315L	1605,00	7,3	2,9	2,7	5,7466	42	19	1430	75	1488	96,0	96,2	96,2	0,73	0,82	0,86	436,00
260	350	315L	1667,00	7,9	3,0	3,0	6,4097	42	19	1430	75	1490	96,0	96,2	96,2	0,73	0,82	0,86	454,00
280	380	315L	1797,00	7,0	2,7	2,7	6,3137	33	15	1719	75	1489	95,8	96,0	96,2	0,76	0,84	0,87	483,00
300	400	315L	1924,00	8,3	3,2	3,0	6,5356	26	12	1600	75	1490	95,8	96,0	96,2	0,74	0,82	0,86	523,00
315	430	355M/L	2019,00	7,9	2,7	2,8	9,4665	37	17	1750	76	1491	95,9	96,3	96,3	0,71	0,80	0,84	562,00
330	450	355M/L	2113,00	7,1	2,5	2,5	10,7168	44	20	1810	76	1492	95,8	96,0	96,2	0,71	0,82	0,85	583,00
355	480	355M/L	2275,00	6,7	2,4	2,5	11,5861	33	15	1878	76	1491	95,9	96,0	96,0	0,74	0,83	0,86	621,00
400	550	355A/B	2562,00	7,5	2,7	2,7	12,5000	44	20	2089	76	1492	95,7	96,0	96,0	0,68	0,79	0,82	733,00
450	610	355A/B	2886,00	7,0	2,8	2,8	13,2200	44	20	2417	76	1490	95,8	96,1	96,2	0,69	0,80	0,84	804,00
500	680	355A/B	3204,00	8,3	2,8	2,8	14,6200	37	17	2246	76	1491	95,9	96,3	96,3	0,72	0,81	0,85	882,00

Note: IE1 and IE2 motors available under request.

W22 - Premium Efficiency - IE3 (50Hz)

Output		Frame	Full Load Torque (Nm)	Locked Rotor Current	Locked Rotor Torque	Break-down Torque	Inertia J (kgm²)	Allowable locked rotor time (s)		Weight (kg)	Sound dB(A)	400 V-							
												Rated speed	% of full load						Full load current
													Efficiency			Power Factor			
kW	HP			Il/In	Tl/Tn	Tb/Tn		Hot	Cold			(rpm)	50	75	100	50	75	100	In (A)
IV Poles																			
0,12	0,16	63	1,24	3,2	2,1	2,0	0,0007	130	59	7,7	43	925	50,0	55,0	57,7	0,40	0,50	0,59	0,51
0,18	0,25	71	1,89	3,2	2,2	2,1	0,0009	66	30	11,5	43	910	56,0	62,0	63,9	0,38	0,48	0,57	0,71
0,25	0,33	80	2,50	4,3	2,0	2,4	0,0029	55	25	12	43	955	63,6	68,5	68,8	0,47	0,60	0,69	0,76
0,37	0,5	80	3,82	4,2	2,1	2,1	0,0025	55	25	12,5	43	925	66,0	69,5	73,5	0,51	0,65	0,75	0,97
0,55	0,75	L80	5,56	5,2	3,0	3,1	0,0037	53	24	15,5	43	945	70,5	75,2	77,2	0,45	0,58	0,68	1,51
0,75	1	L90S	7,54	5,2	2,5	2,6	0,0060	68	31	22	45	950	76,5	79,0	79,0	0,49	0,62	0,71	1,93
1,1	1,5	L90L	11,10	5,5	2,7	2,7	0,0077	44	20	26	45	945	79,3	81,4	81,0	0,50	0,64	0,73	2,69
1,5	2	100L	15,00	5,5	2,7	2,7	0,0143	68	31	32	44	955	81,5	82,5	82,5	0,49	0,62	0,71	3,70
2,2	3	112M	21,90	6,5	2,7	2,7	0,0257	57	26	46	49	960	83,0	84,5	84,5	0,48	0,61	0,71	5,29
3	4	132S	29,60	6,1	1,9	2,4	0,0416	88	40	65	53	970	85,0	85,6	85,6	0,53	0,66	0,73	6,93
4	5,5	132M	39,40	6,5	2,1	2,5	0,0492	44	20	70	53	970	86,0	86,8	86,8	0,53	0,66	0,73	9,11
5,5	7,5	132M/L	54,20	7,3	2,2	2,6	0,0755	33	15	78	53	970	86,5	87,9	88,0	0,50	0,64	0,70	12,90
7,5	10	160M	73,90	6,0	2,0	2,4	0,1404	35	16	118	57	970	88,5	89,0	89,1	0,63	0,73	0,79	15,40
9,2	12,5	160L	90,20	6,5	2,3	2,9	0,1756	40	18	135	57	975	90,0	90,6	90,0	0,64	0,75	0,81	18,20
11	15	160L	107,00	7,1	2,8	3,0	0,1931	26	12	140	57	978	89,0	90,1	90,5	0,56	0,70	0,77	22,80
15	20	180L	146,00	8,5	3,1	3,7	0,2970	18	8	185	56	980	90,0	91,2	91,2	0,61	0,73	0,80	29,70
18,5	25	200L	180,00	6,3	2,4	2,6	0,3510	35	16	215	60	980	91,0	91,7	91,9	0,63	0,70	0,80	36,30
22	30	200L	214,00	6,4	2,3	2,6	0,4212	37	17	225	60	980	91,0	92,0	92,2	0,60	0,73	0,79	43,60
30	40	225S/M	291,00	7,0	2,3	2,6	0,8194	46	21	380	63	985	93,0	93,4	93,1	0,67	0,78	0,83	56,00
37	50	250S/M	358,00	7,2	2,5	2,7	1,2403	33	15	430	64	987	93,3	93,5	93,5	0,65	0,77	0,81	70,50
45	60	280S/M	435,00	6,6	2,1	2,5	2,3531	57	26	640	65	988	93,0	93,9	93,9	0,62	0,73	0,80	86,50
55	75	280S/M	531,00	6,8	2,2	2,5	2,6892	40	18	665	65	989	93,5	94,2	94,3	0,62	0,74	0,79	107,00
75	100	315S/M	723,00	6,3	2,0	2,5	4,3485	70	32	920	67	991	94,0	94,6	94,6	0,66	0,76	0,81	141,00
90	125	315S/M	868,00	6,4	2,2	2,5	5,4245	64	29	990	67	991	94,5	95,1	95,1	0,64	0,75	0,80	171,00
110	150	315S/M	1061,00	6,5	2,3	2,7	6,1478	53	24	1040	67	991	94,0	94,8	95,1	0,61	0,74	0,79	211,00
132	175	315S/M	1271,00	7,5	2,6	2,9	7,2327	46	21	1100	67	992	94,5	95,0	95,4	0,60	0,72	0,78	256,00
150	200	315L	1448,00	6,5	2,3	2,5	7,9559	55	25	1200	68	990	95,4	95,8	95,7	0,67	0,78	0,83	273,00
160	220	315L	1544,00	7,1	2,5	2,8	6,8710	48	22	1230	68	990	95,6	95,6	95,8	0,67	0,77	0,82	294,00
185	250	315L	1786,00	7,1	2,4	2,6	9,2221	44	20	1300	68	990	95,0	95,8	95,8	0,65	0,76	0,81	344,00
200	270	355M/L	1924,00	5,8	1,9	2,1	10,4196	86	39	1620	73	993	94,3	95,3	95,8	0,66	0,76	0,80	377,00
220	300	355M/L	2117,00	6,5	2,0	2,3	12,0174	79	36	1710	73	993	95,0	95,5	96,0	0,63	0,74	0,79	419,00
250	340	355M/L	2406,00	6,0	2,1	2,2	13,8662	84	38	1830	73	993	94,5	95,5	95,8	0,64	0,75	0,79	477,00
280	380	355M/L	2694,00	6,4	2,3	2,5	15,0217	53	24	1970	73	993	95,1	95,1	96,0	0,60	0,71	0,77	547,00
300	400	355M/L	2887,00	6,3	2,1	2,4	14,9929	55	25	2150	73	993	95,0	96,0	96,0	0,61	0,73	0,79	571,00
315	430	355M/L	3034,00	6,1	2,1	2,1	15,0224	55	25	2150	73	992	95,2	95,8	95,8	0,66	0,76	0,80	593,00
355	480	355A/B	3419,00	6,2	2,0	2,3	17,1000	64	29	2400	73	992	95,3	95,7	95,8	0,63	0,74	0,79	677,00
370	500	355A/B	3571,00	6,0	2,2	2,3	18,0000	55	25	2500	73	990	95,4	95,8	95,9	0,63	0,74	0,79	705,00
400	550	355A/B	3853,00	6,1	2,0	2,3	18,9200	64	29	2620	73	992	95,4	95,8	95,9	0,63	0,74	0,79	762,00
VIII Poles																			
0,12	0,16	71	1,76	2,4	1,8	1,9	0,0009	66	30	11,5	41	650	44,0	50,0	52,5	0,35	0,43	0,50	0,66
0,18	0,25	80	2,46	3,2	2,0	2,0	0,0029	183	83	13,5	42	700	51,0	57,0	58,7	0,44	0,54	0,64	0,69
0,25	0,33	80	3,44	3,5	2,0	2,2	0,0034	66	30	14,5	42	695	53,0	60,0	64,1	0,42	0,52	0,63	0,89
0,37	0,5	90S	4,98	4,0	2,0	2,2	0,0055	156	71	19	44	710	61,0	66,0	69,3	0,41	0,53	0,62	1,24
0,55	0,75	90L	7,56	3,8	1,9	2,2	0,0066	64	29	23	44	695	65,0	70,0	73,0	0,44	0,57	0,67	1,62
0,75	1	100L	10,10	4,3	1,8	2,1	0,0127	66	30	30,5	50	710	72,5	75,5	75,5	0,41	0,53	0,62	2,31
1,1	1,5	100L	14,80	4,6	1,9	2,0	0,0143	66	30	33	50	710	73,0	76,0	77,7	0,41	0,53	0,62	3,30
1,5	2	112M	20,30	5,0	2,5	2,8	0,0238	62	28	43	46	705	79,0	79,5	79,9	0,45	0,59	0,68	3,98
2,2	3	132S	29,60	6,5	2,3	2,8	0,0690	59	27	69	48	710	81,5	82,0	82,1	0,51	0,65	0,72	5,37
3	4	132M	40,10	6,5	2,4	2,6	0,0838	46	21	75	48	715	82,5	83,5	83,5	0,51	0,64	0,72	7,20
4	5,5	160M	52,40	5,0	2,1	2,3	0,1229	73	33	114	51	730	83,0	84,8	84,8	0,47	0,61	0,68	10,00
5,5	7,5	160M	72,50	5,0	2,1	2,3	0,1492	59	27	123	51	725	85,0	86,2	86,2	0,52	0,64	0,70	13,20
7,5	10	160L	98,30	5,5	2,4	2,6	0,2199	53	24	145	51	729	85,4	87,0	87,3	0,46	0,59	0,68	18,20
9,2	12,5	180M	120,00	7,0	2,4	2,6	0,2575	26	12	173	52	730	87,0	88,1	88,1	0,58	0,71	0,78	19,30
11	15	180L	144,00	6,5	2,3	2,7	0,2846	29	13	185	52	730	88,6	88,6	88,6	0,55	0,68	0,76	23,60
15	20	200L	196,00	4,9	2,0	2,0	0,4571	70	32	220	56	730	88,5	89,9	90,0	0,56	0,67	0,73	33,00
18,5	25	225S/M	240,00	6,5	2,0	2,4	0,8219	24	11	377	56	735	89,8	90,3	90,3	0,57	0,69	0,76	38,90
22	30	225S/M	286,00	7,0	2,1	2,4	0,9574	33	15	402	56	735	90,3	90,8	90,8	0,61	0,73	0,79	44,30
30	40	250S/M	391,00	7,4	2,1	2,8	1,4281	29	13	490	56	733	91,0	91,5	91,5	0,65	0,76	0,81	58,40
37	50	280S/M	478,00	5,5	1,8	2,3	2,8206	70	32	673	59	740	91,5	92,0	92,0	0,60	0,71	0,77	75,40
45	60	280S/M	581,00	5,8	1,8	2,1	3,4896	66	30	720	59	740	92,2	92,4	92,4	0,60	0,71	0,77	91,30
55	75	315S/M	708,00	6,0	1,7	2,2	5,1147	44	20	960	62	742	92,2	92,7	92,5	0,65	0,75	0,79	109,00
75	100	315S/M	968,00	6,0	1,8	2,2	6,5627	88	40	1025	62	740	92,8	93,3	93,3	0,65	0,75	0,80	145,00
90	125	315S/M	1159,00	6,5	2,1	2,3	7,8388	66	30	1100	62	742	93,1	93,6	93,6	0,65	0,75	0,79	176,00
110	150	315L	1418,00	6,0	1,9	2,2	9,4602	77	35	1367	68	741	93,4	93,9	93,9	0,64	0,74	0,79	214,00
132	175	355M/L	1700,00	6,5	1,2	2,1	12,5576	79	36	1587	70	742	93,7	94,2	94,2	0,64	0,74	0,79	256,00
150	200	355M/L	1926,00	6,5	1,7	2,5	13,1702	73	33	1540	70	744	94,0	94,2	94,2	0,62	0,73	0,78	295,00
160	220	355M/L	2055,00	6,4	1,4	2,3	17,3949	66	30	1747	70	744	94,0	94,5	94,5	0,64	0,75	0,79	309,00
185	250	355M/L	2373,00	6,9	2,0	2,7	18,5266	77	35	1819	70	745	93,4	94,7	94,7	0,63	0,73	0,78	361,00
200	270	355M/L	2569,00	6,2	1,4	2,2	18,9208	114	52	1891	70	744	94,3	94,8	94,8	0,65	0,76	0,80	381,00
220	300	355M/L	2825,00	7,0	1,8	2,6	19,8363	66	30	2020	70	744	94,8	95,1	95,2	0,60	0,72	0,77	433,00
250	340	355A/B	3211,00	6,2	1,6	2,5	21,6700	103	47	2092	70	744	94,8	95,3	95,3	0,62	0,73	0,79	479,00
260	350	355A/B	3335,00	6,2	1,5	2,4	21,6700	103	47	2092	70	745	94,8	95,3	95,3	0,62	0,73	0,79	498,00
280	380	355A/B	3591,00	7,8	2,2	3,1	25,0300	66	30	2279	70	745	94,1	95,1	95,3	0,61	0,71	0,77	551,00

Note: IE1 and IE2 motors available under request.

W22 - Premium Efficiency - IE3 (60Hz)

Output		Frame	Full Load Torque (Nm)	Locked Rotor Current Il/In	Locked Rotor Torque Tl/Tn	Break-down Torque Tb/Tn	Inertia J (kgm²)	Allowable locked rotor time (s)		Weight (kg)	Sound dB(A)	400 V							
												Rated speed (rpm)	% of full load						Full load current In (A)
													Efficiency			Power Factor			
kW	HP							Hot	Cold				50	75	100	50	75	100	
II Poles																			
0,12	0,16	63	0,34	6,3	3,3	3,2	0,0001	66	30	5,7	56	3410	54,0	61,0	64,5	0,53	0,65	0,74	0,36
0,18	0,25	63	0,50	5,8	3,0	3,0	0,0001	42	19	6,2	56	3420	61,0	66,0	68,0	0,57	0,69	0,78	0,49
0,25	0,33	63	0,70	5,9	3,1	3,2	0,0002	44	20	6,7	56	3410	64,0	69,0	70,0	0,58	0,71	0,80	0,64
0,37	0,5	63	1,05	5,8	2,5	2,5	0,0002	37	17	7,7	56	3360	69,0	73,0	73,4	0,62	0,75	0,83	0,88
0,55	0,75	71	1,53	6,3	2,4	2,8	0,0004	40	18	7,5	60	3440	72,5	75,5	76,8	0,63	0,76	0,83	1,24
0,75	1	71	2,09	6,6	3,0	3,3	0,0005	22	10	9	60	3435	77,0	80,0	80,5	0,64	0,76	0,84	1,61
1,1	1,5	80	3,05	7,8	3,5	3,3	0,0009	42	19	14	62	3445	81,5	83,6	84,0	0,64	0,76	0,83	2,28
1,5	2	L80	4,15	7,8	3,8	3,6	0,0010	26	12	16	62	3455	82,0	84,2	85,5	0,64	0,75	0,82	3,09
2,2	3	L90S	6,06	7,8	3,4	3,1	0,0023	31	14	22	68	3470	86,0	86,5	86,5	0,69	0,80	0,85	4,32
2,2	3	L90L	6,06	7,8	3,4	3,1	0,0023	31	14	22	68	3470	86,0	86,5	86,5	0,69	0,80	0,85	4,32
3	4	L90L	8,24	8,5	4,3	4,4	0,0028	29	13	23	68	3480	87,0	88,0	88,5	0,62	0,75	0,82	5,96
3,7	5	100L	10,10	8,2	2,7	3,9	0,0064	18	8	32	71	3510	86,4	88,3	88,5	0,69	0,80	0,86	7,02
4,5	6	112M	12,30	7,5	2,5	3,1	0,0080	26	12	40	66	3500	87,7	89,0	89,4	0,74	0,84	0,88	8,26
5,5	7,5	112M	15,00	8,3	2,8	3,5	0,0095	20	9	43	69	3500	87,9	89,4	89,7	0,72	0,82	0,87	10,20
7,5	10	132S	20,30	8,1	2,4	3,3	0,0216	22	10	67	68	3535	87,5	89,0	90,2	0,71	0,81	0,86	14,00
9,2	12,5	132M	24,90	8,1	2,5	3,4	0,0269	22	10	74	68	3535	89,5	90,6	91,0	0,76	0,85	0,89	16,40
11	15	132M	29,70	9,2	3,0	3,6	0,0305	15	7	78	68	3535	89,3	90,5	91,0	0,71	0,81	0,86	20,20
15	20	160M	40,40	7,6	2,7	3,2	0,0553	22	10	115	72	3545	90,0	90,8	91,0	0,74	0,83	0,87	27,40
18,5	25	160M	49,80	8,3	3,0	3,5	0,0626	18	8	119	72	3550	91,0	91,5	91,7	0,72	0,82	0,87	33,40
22	30	160L	59,20	9,0	3,4	4,0	0,0700	18	8	131	72	3550	91,0	91,5	91,7	0,70	0,80	0,86	40,30
30	40	200M	80,40	6,7	3,0	2,9	0,1703	31	14	219	76	3565	91,0	91,7	92,4	0,74	0,82	0,86	54,50
37	50	200L	99,30	7,6	2,8	2,8	0,2128	31	14	265	76	3560	91,9	92,4	93,0	0,73	0,82	0,86	66,80
45	60	225S/M	121,00	8,2	3,0	3,4	0,2991	20	9	393	79	3567	92,4	93,3	93,6	0,76	0,84	0,88	78,90
55	75	225S/M	147,00	8,5	2,8	3,2	0,3251	15	7	406	79	3568	93,0	94,0	94,1	0,78	0,86	0,88	95,90
75	100	250S/M	202,00	7,5	2,6	3,0	0,4366	22	10	477	79	3555	94,0	94,8	94,9	0,81	0,86	0,88	130,00
90	125	280S/M	241,00	7,7	2,0	3,0	1,0665	40	18	747	81	3575	93,3	94,9	95,3	0,78	0,86	0,88	155,00
110	150	280S/M	294,00	7,9	2,3	3,0	1,1553	40	18	716	81	3575	94,0	94,9	95,2	0,80	0,86	0,89	187,00
132	175	315S/M	352,00	7,5	2,2	2,8	1,7385	84	38	906	81	3580	93,6	95,2	95,4	0,80	0,86	0,89	224,00
150	200	315S/M	400,00	7,5	2,1	2,8	2,1057	48	22	975	81	3580	94,2	95,4	95,6	0,80	0,86	0,89	254,00
185	250	315S/M	494,00	7,5	2,1	2,7	2,4691	48	22	1053	81	3580	95,3	95,8	96,1	0,82	0,88	0,90	309,00
200	270	315L	534,00	7,2	2,4	2,8	3,4245	75	34	1200	82	3578	94,2	95,5	95,8	0,80	0,87	0,89	339,00
220	300	315L	587,00	7,8	2,7	3,0	3,7222	66	30	1320	82	3580	94,3	95,1	95,8	0,81	0,88	0,90	369,00
250	340	315L	668,00	7,0	2,7	2,7	4,1689	62	28	1350	82	3578	94,4	95,2	95,8	0,84	0,89	0,90	418,00
260	350	315L	694,00	7,0	2,7	2,7	4,1687	62	28	1370	82	3578	94,4	95,2	95,8	0,84	0,89	0,90	436,00
300	400	355M/L	799,00	8,4	2,9	2,9	5,3617	53	24	1743	84	3586	95,5	95,7	96,1	0,84	0,89	0,91	495,00
330	450	355M/L	880,00	8,4	2,5	2,5	6,0051	81	37	1860	84	3583	95,3	95,7	95,8	0,87	0,90	0,91	547,00
370	500	355M/L	986,00	9,5	3,3	3,6	6,0050	55	25	1825	84	3584	95,6	95,8	95,8	0,81	0,86	0,88	634,00
IV Poles																			
0,12	0,16	63	0,67	5,0	2,9	2,9	0,0005	106	48	6,7	48	1715	58,0	64,0	66,0	0,45	0,56	0,65	0,40
0,18	0,25	63	1,01	5,0	2,9	2,8	0,0006	86	39	7,7	48	1710	62,0	67,0	70,0	0,49	0,61	0,70	0,53
0,25	0,33	63	1,40	5,5	3,3	3,2	0,0007	66	30	8,2	48	1705	66,0	71,0	73,4	0,44	0,56	0,66	0,75
0,37	0,5	71	2,08	5,1	2,4	2,7	0,0007	97	44	8,5	47	1700	75,0	77,5	78,2	0,49	0,62	0,70	0,98
0,55	0,75	80	3,00	8,4	3,0	3,4	0,0024	31	14	14,7	48	1750	75,0	79,0	81,1	0,53	0,67	0,75	1,30
0,75	1	90S	4,06	7,8	2,4	3,5	0,0049	33	15	18,5	51	1765	79,0	83,0	84,0	0,51	0,63	0,72	1,79
1,1	1,5	L90S	5,99	7,6	2,7	3,2	0,0060	40	18	22	51	1755	82,5	85,5	86,5	0,60	0,72	0,79	2,32
1,5	2	L90S	8,19	7,7	2,7	3,2	0,0066	33	15	23	51	1750	84,0	86,0	86,5	0,59	0,72	0,80	3,12
2,2	3	100L	12,00	8,6	3,8	3,8	0,0097	55	25	33	54	1745	86,6	88,2	89,5	0,59	0,71	0,78	4,55
3	4	112M	16,30	7,8	2,6	3,3	0,0156	53	24	42	56	1755	87,2	89,0	89,5	0,58	0,70	0,77	6,28
3,7	5	112M	20,10	7,6	2,4	3,1	0,0181	51	23	44	56	1755	88,1	89,3	89,5	0,61	0,74	0,80	7,46
4,5	6	112M	24,50	7,3	2,7	3,5	0,0180	35	16	44	56	1755	87,5	89,1	89,5	0,51	0,65	0,74	9,81
5,5	7,5	132S	29,70	9,0	2,4	3,6	0,0488	35	16	67	58	1770	89,9	91,2	91,7	0,63	0,76	0,82	10,60
7,5	10	132S	40,60	8,5	2,3	3,4	0,0563	18	8	72	58	1765	90,8	91,5	91,7	0,60	0,78	0,84	14,10
9,2	12,5	132M/L	49,90	8,9	2,4	3,4	0,0676	20	9	86	58	1760	90,5	91,5	91,7	0,62	0,75	0,82	17,70
11	15	160M	59,00	8,0	3,2	3,3	0,1188	26	12	112	64	1780	90,6	92,4	92,4	0,63	0,75	0,81	21,20
15	20	160M	80,70	9,0	3,0	3,0	0,1471	42	19	133	64	1775	91,6	92,9	93,0	0,64	0,75	0,82	28,40
18,5	25	160L	99,60	8,9	3,0	3,2	0,1813	26	12	148	64	1775	92,0	93,0	93,6	0,64	0,75	0,81	35,20
22	30	180M	119,00	8,0	2,8	3,1	0,1919	35	16	176	63	1772	92,8	93,3	93,6	0,66	0,76	0,81	41,90
30	40	200M	161,00	7,3	2,8	2,8	0,3202	26	12	215	66	1782	93,5	94,0	94,1	0,68	0,78	0,84	54,80
37	50	200L	199,00	7,8	3,2	3,3	0,3728	31	14	243	66	1780	93,0	94,4	94,5	0,62	0,74	0,81	69,70
45	60	225S/M	241,00	7,5	2,7	3,0	0,6367	31	14	404	67	1781	93,0	94,7	95,0	0,70	0,80	0,84	81,40
55	75	225S/M	296,00	7,5	2,6	2,8	0,7346	46	21	430	67	1777	94,5	95,0	95,4	0,72	0,81	0,85	97,90
75	100	250S/M	402,00	8,5	3,3	3,4	1,0147	33	15	505	68	1783	94,6	95,2	95,4	0,68	0,78	0,84	135,00
90	125	280S/M	481,00	7,6	2,4	2,9	1,8652	35	16	683	73	1788	94,0	94,8	95,4	0,65	0,76	0,82	166,00
110	150	280S/M	588,00	7,9	2,4	2,7	2,3315	44	20	827	73	1786	94,8	95,5	95,8	0,75	0,83	0,86	193,00
132	175	315S/M	704,00	7,4	2,6	2,6	3,0045	53	24	958	75	1791	94,5	95,5	96,2	0,72	0,81	0,85	233,00
150	200	315S/M	800,00	7,8	2,6	2,7	3,5527	66	30	1029	75	1791	94,9	95,9	96,2	0,72	0,81	0,85	265,00
160	220	315S/M	854,00	7,6	2,6	2,8	3,7700	59	27	1030	75	1790	95,5	96,0	96,2	0,75	0,84	0,87	276,00
185	250	315S/M	988,00	7,6	2,8	2,8	3,8858	77	35	1072	75	1789	95,3	96,0	96,3	0,75	0,83	0,87	319,00
200	270	315L	1068,00	7,2	2,7	2,5	5,3048	44	20	1332	77	1790	95,0	95,8	96,2	0,72	0,82	0,85	353,00
220	300	315L	1174,00	8,5	3,0	2,9	5,8574	70	32	1430	77	1790	95,4	95,8	96,2	0,72	0,81	0,85	388,00
250	340	315L	1334,00	8,7	3,0	2,9	6,4100	66	30	1527	77	1790	94,5	96,2	96,2	0,71	0,81	0,85	441,00
260	350	315L	1388,00	8,7	2,8	2,7	6,4100	62	28	1527	77	1790	95,4	96,2	96,2	0,71	0,81	0,85	459,00
300	400	355M/L	1601,00	7,8	2,5	2,4	8,0871	26	12	1615	81	1790	95,9	96,4	96,6	0,76	0,84	0,86	521,00
330	450	355M/L	1761,00	7,0	2,5	2,5	9,5053	31	14	1751	81	1791	96,0	96,5	96,7	0,73	0,82	0,86	573,00
370	500	355M/L	1973,00	7,8	2,7	3,0	11,0967	44	20	1916	81	1792	94,9	96,0	96,2	0,70	0,79	0,83	669,00
400	550	355M/L	2133,00	8,0	3,0	3,0	11,6098	33	15	1966	81	1792	96,0	96,2	96,2	0,71	0,80	0,84	715,00

Note: IE1 and IE2 motors available under request.

W22 - Premium Efficiency - IE3 (60Hz)

Output		Frame	Full Load Torque (Nm)	Locked Rotor Current Il/In	Locked Rotor Torque Tl/Tn	Break-down Torque Tb/Tn	Inertia J (kgm²)	Allowable locked rotor time (s)		Weight (kg)	Sound dB(A)	400 V							
												Rated speed (rpm)	% of full load						Full load current In (A)
													Efficiency			Power Factor			
kW	HP							Hot	Cold				50	75	100	50	75	100	
VI Poles																			
0,12	0,16	63	1,03	3,0	1,8	1,9	0,0007	88	40	8,2	47	1115	48,0	54,0	64,0	0,42	0,52	0,62	0,44
0,18	0,25	71	1,56	3,3	1,9	2,1	0,0007	152	69	8	47	1100	52,0	59,0	67,5	0,38	0,48	0,55	0,70
0,25	0,33	80	2,10	4,5	2,3	2,5	0,0024	66	30	12	47	1140	57,0	62,5	71,4	0,47	0,59	0,69	0,73
0,37	0,5	80	3,14	4,3	2,0	2,2	0,0025	59	27	12,5	47	1125	62,0	67,0	75,3	0,51	0,65	0,75	0,95
0,55	0,75	90S	4,53	6,0	2,7	3,1	0,0055	77	35	19	50	1160	78,0	81,5	81,7	0,45	0,58	0,67	1,45
0,75	1	L90S	6,18	6,2	2,8	3,1	0,0066	64	29	23	50	1160	78,5	81,5	82,5	0,48	0,59	0,68	1,93
1,1	1,5	L100L	9,02	6,6	2,9	3,2	0,0176	134	61	38	48	1165	82,5	85,5	87,5	0,46	0,59	0,65	2,79
1,5	2	112M	12,30	7,3	2,7	3,2	0,0257	106	48	42	52	1165	85,4	87,7	88,5	0,47	0,60	0,68	3,60
2,2	3	L112M	18,00	7,4	3,0	3,4	0,0293	73	33	47	52	1165	86,0	88,0	89,5	0,47	0,60	0,68	5,21
3	4	132S	24,40	7,2	2,1	2,8	0,0530	114	52	62	55	1175	87,5	89,0	89,5	0,52	0,64	0,72	6,72
3,7	5	132S	30,20	7,5	2,4	3,0	0,0568	88	40	63	55	1170	87,5	89,0	89,5	0,50	0,63	0,71	8,40
4,5	6	132M	36,60	7,4	2,7	2,9	0,0643	86	39	75	55	1175	87,5	89,0	89,5	0,51	0,64	0,70	10,40
5,5	7,5	132M	44,80	7,5	2,4	3,2	0,0679	68	31	80	55	1174	88,0	89,5	91,0	0,52	0,65	0,73	12,00
7,5	10	132M/L	61,50	7,3	2,4	2,8	0,0755	42	19	90	55	1165	88,0	89,5	91,0	0,52	0,65	0,73	16,30
9,2	12,5	160M	74,80	6,3	2,5	2,9	0,1489	57	26	122	59	1175	90,7	91,2	91,2	0,59	0,72	0,78	18,70
11	15	160M	89,50	7,0	2,7	2,9	0,1843	44	20	140	59	1175	90,7	91,8	91,8	0,62	0,74	0,80	21,70
15	20	180M	122,00	8,0	2,6	3,2	0,2560	26	12	174	59	1175	91,5	92,0	92,2	0,68	0,79	0,85	27,60
18,5	25	180L	150,00	8,5	2,8	3,3	0,3233	18	8	193	59	1175	92,5	93,0	93,1	0,68	0,79	0,84	34,10
22	30	200L	178,00	6,5	2,3	2,8	0,4204	55	25	232	62	1180	92,0	92,5	93,0	0,63	0,75	0,81	42,10
30	40	200L	243,00	6,7	2,5	2,8	0,4905	33	15	251	62	1180	93,0	93,6	94,1	0,61	0,73	0,79	58,30
37	50	225S/M	298,00	7,4	2,6	2,8	0,8876	29	13	398	66	1185	93,5	94,0	94,1	0,70	0,80	0,84	67,50
45	60	250S/M	363,00	7,6	2,5	2,7	1,1960	33	15	463	68	1186	94,0	94,5	94,5	0,70	0,79	0,84	81,80
55	75	250S/M	443,00	7,6	2,8	2,8	1,3781	24	11	491	68	1185	94,0	94,4	94,5	0,67	0,77	0,82	102,00
75	100	280S/M	603,00	7,1	2,2	2,6	2,9133	37	17	699	69	1189	93,2	94,2	95,0	0,60	0,72	0,78	146,00
90	125	280S/M	723,00	6,5	2,2	2,5	3,3538	35	16	678	69	1189	94,7	94,9	95,0	0,68	0,78	0,83	165,00
110	150	315S/M	883,00	6,6	2,1	2,5	5,9914	73	33	1028	70	1190	94,9	95,6	95,8	0,69	0,79	0,83	200,00
132	175	315S/M	1060,00	6,6	2,2	2,4	6,5360	48	22	1072	70	1190	95,0	95,7	95,8	0,69	0,79	0,83	240,00
150	200	315L	1204,00	7,3	2,3	2,4	9,4029	81	37	1365	71	1190	95,4	95,8	95,8	0,66	0,77	0,82	276,00
160	220	315L	1283,00	7,4	2,7	2,8	10,4878	88	40	1448	71	1192	95,4	95,8	95,8	0,64	0,76	0,81	298,00
185	250	355M/L	1483,00	6,0	1,8	2,1	9,2619	79	36	1528	77	1192	95,3	96,0	96,0	0,69	0,78	0,81	343,00
200	270	355M/L	1600,00	6,5	2,0	2,2	9,9756	75	34	1594	77	1194	95,3	96,0	96,0	0,68	0,78	0,82	366,00
220	300	355M/L	1761,00	6,5	2,0	2,3	10,6716	66	30	1642	77	1194	95,1	95,9	96,1	0,65	0,75	0,80	413,00
260	350	355M/L	2084,00	6,8	2,0	2,2	12,9915	128	58	1824	77	1192	95,0	96,0	96,2	0,69	0,78	0,82	475,00
300	400	355M/L	2403,00	7,0	2,2	2,3	15,0505	106	48	1982	77	1193	95,0	95,8	96,0	0,66	0,77	0,80	564,00
330	450	355M/L	2645,00	6,3	2,0	2,1	15,0217	57	26	1989	77	1192	95,5	95,7	96,0	0,67	0,77	0,80	620,00
370	500	355M/L	2966,00	6,3	2,2	2,3	15,0217	55	25	1989	77	1192	95,5	95,7	96,0	0,63	0,74	0,79	704,00
VIIII Poles																			
0,12	0,16	71	1,39	2,8	1,8	2,0	0,0009	372	169	9,5	45	825	48,0	54,0	59,5	0,32	0,40	0,48	0,61
0,18	0,25	80	2,02	3,5	2,0	2,2	0,0027	114	52	12	46	850	51,0	57,0	64,0	0,42	0,53	0,62	0,66
0,25	0,33	80	2,86	3,6	1,9	2,2	0,0032	108	49	14,5	46	835	56,0	60,0	68,0	0,42	0,53	0,64	0,83
0,37	0,5	90S	4,21	3,4	1,7	2,3	0,0055	88	40	19,5	48	840	58,0	63,0	72,0	0,40	0,51	0,60	1,23
0,55	0,75	90L	6,26	3,7	1,9	2,3	0,0066	77	35	23	48	840	62,0	65,0	74,0	0,40	0,52	0,60	1,79
0,75	1	L90L	8,38	4,1	1,9	2,3	0,0077	55	25	25	48	855	66,0	71,0	75,5	0,40	0,51	0,60	2,39
1,1	1,5	100L	12,20	4,7	2,0	2,4	0,0143	106	48	33	54	865	75,5	79,0	81,4	0,40	0,52	0,60	3,26
1,5	2	112M	16,80	5,2	2,5	2,6	0,0257	79	36	42	50	855	80,4	82,8	84,0	0,45	0,57	0,66	3,91
2,2	3	132M	24,20	7,0	2,0	2,8	0,0838	101	46	75	52	870	84,0	86,0	86,5	0,51	0,64	0,72	5,10
3	4	132M	33,10	6,8	2,6	2,7	0,0986	73	33	86	52	865	84,5	86,0	86,6	0,51	0,64	0,72	6,94
3,7	5	132M/L	40,90	6,5	2,2	2,6	0,1033	64	29	90	52	865	85,0	86,5	86,5	0,51	0,64	0,72	8,58
4,5	6	160M	48,90	5,1	2,2	2,4	0,1317	81	37	117	54	880	86,5	88,0	88,0	0,48	0,61	0,69	10,70
5,5	7,5	160M	59,70	5,0	2,0	2,5	0,1756	79	36	134	54	880	85,0	87,5	88,4	0,51	0,63	0,71	12,60
7,5	10	160L	81,40	5,4	2,3	2,5	0,2019	70	32	148	54	880	89,0	89,5	90,0	0,50	0,63	0,70	17,20
9,2	12,5	180M	100,00	6,8	2,1	2,6	0,2434	33	15	169	54	879	90,5	91,0	90,0	0,60	0,72	0,78	18,90
11	15	180L	119,00	7,0	2,4	2,8	0,2846	31	14	185	54	880	89,5	89,8	90,0	0,60	0,72	0,78	22,70
15	20	180L	163,00	7,3	2,3	3,0	0,3246	22	10	196	61	880	90,8	91,4	91,5	0,60	0,72	0,79	29,90
18,5	25	200L	201,00	4,8	1,8	2,0	0,4396	55	25	231	56	880	91,0	91,5	91,5	0,57	0,69	0,75	38,90
22	30	225S/M	238,00	6,7	1,9	2,7	0,7203	26	12	367	60	885	91,0	91,7	91,7	0,60	0,71	0,79	43,80
30	40	225S/M	324,00	6,8	2,3	2,9	0,9604	31	14	400	60	885	91,5	91,6	91,7	0,63	0,74	0,79	59,70
37	50	250S/M	401,00	7,8	2,2	3,3	1,1960	26	12	463	60	882	92,0	92,3	92,4	0,60	0,71	0,78	74,10
45	60	250S/M	487,00	8,0	2,4	3,3	1,3340	24	11	485	60	883	92,1	92,3	92,4	0,64	0,74	0,80	87,90
55	75	280S/M	590,00	6,0	1,6	2,0	2,8206	51	23	682	63	890	94,1	94,4	94,3	0,65	0,76	0,80	105,00
75	100	280S/M	805,00	6,0	1,7	2,1	3,3848	44	20	815	63	890	94,2	94,4	94,4	0,65	0,74	0,79	145,00
90	125	315S/M	966,00	6,0	1,8	2,0	5,6627	57	26	1008	66	890	94,6	94,9	94,9	0,67	0,76	0,80	172,00
110	150	315L	1178,00	6,3	1,9	2,3	9,4606	117	53	1367	71	892	93,7	94,1	94,1	0,60	0,72	0,78	217,00
132	175	315L	1414,00	6,2	2,0	2,3	11,2799	123	56	1508	71	892	94,1	94,5	94,5	0,60	0,72	0,78	259,00
150	200	355M/L	1603,00	6,0	1,4	2,3	13,1695	86	39	1561	75	894	94,3	94,4	94,5	0,64	0,75	0,79	290,00
185	250	355M/L	1975,00	6,0	1,4	2,3	15,9259	114	52	1721	75	895	95,3	95,6	95,7	0,64	0,75	0,80	349,00
220	300	355M/L	2354,00	6,0	1,5	2,1	18,3432	66	30	1859	75	893	94,8	94,9	95,0	0,66	0,76	0,80	418,00
260	350	355M/L	2782,00	6,3	1,5	2,1	19,8718	66	30	1955	75	893	94,8	94,9	95,0	0,66	0,76	0,80	494,00
300	400	355A/B	3206,00	7,4	2,0	2,8	22,6650	57	26	2260	75	894	94,8	95,0	95,0	0,62	0,73	0,79	578,00
330	450	355A/B	3527,00	6,8	1,7	2,5	25,9870	75	34	2460	75	894	94,8	95,0	95,0	0,65	0,75	0,80	627,00

Note: IE1 and IE2 motors available under request.

W22 IE5

PRESENTING THE WORLD'S HIGHEST AND WIDEST EFFICIENCY LEVEL INDUCTION MOTOR RANGE

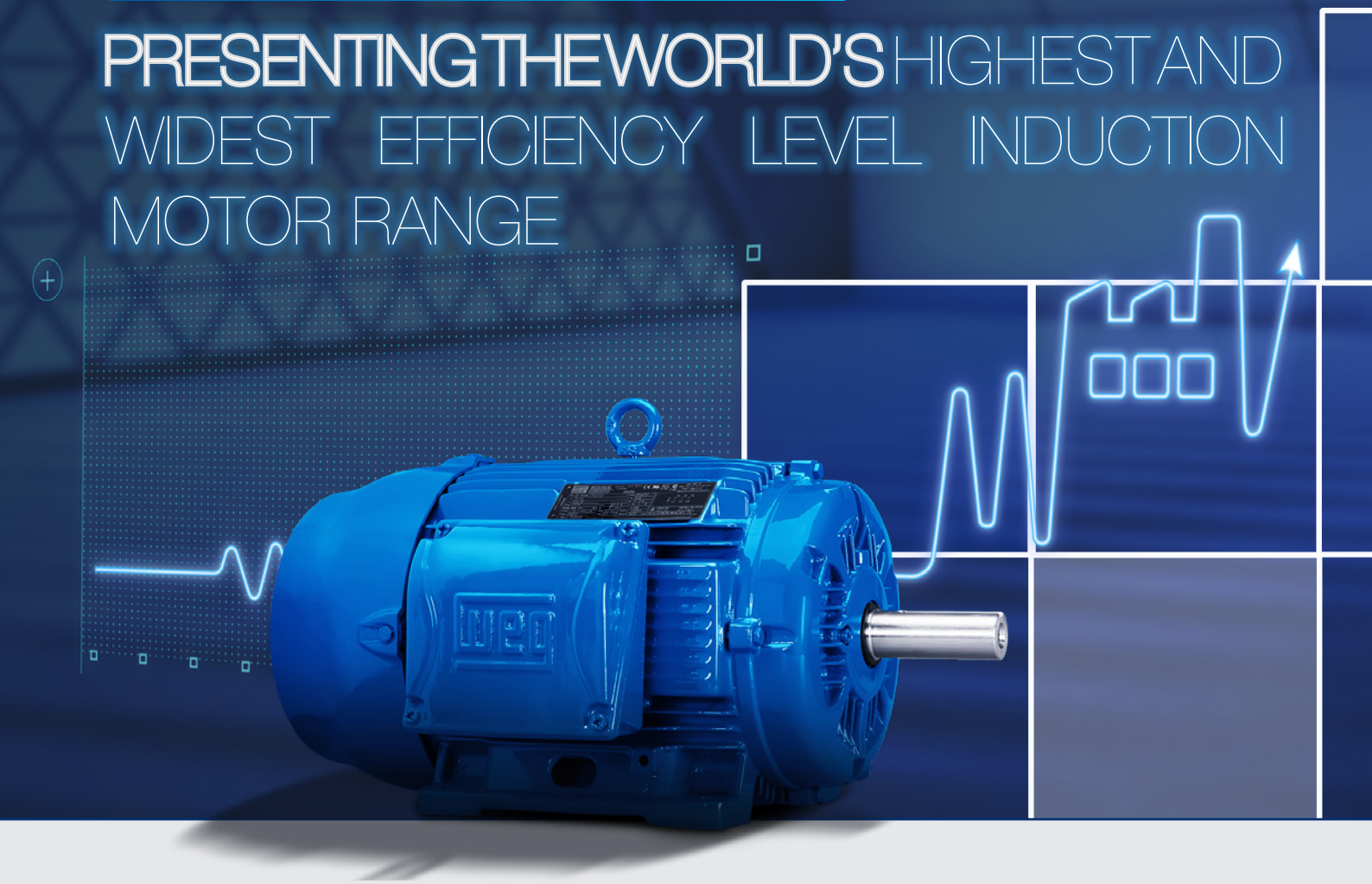

In the last two decades, global energy consumption has increased by 50% with forecast for that the next two decades will continue to see significant increases in this usage.

This increasing demand for electrical energy to sustain global development requires consistent heavy investments in power supply generation. However, in addition to complex medium and long term planning, these investments rely on natural resources, which are becoming depleted due to constant pressures upon the environment.

As a reflection of this scenario, electric energy costs are rising dramatically, and in comparison to other economic indicators, standing out negatively.

One of the main contributing factors to this increase in power consumption is in the industrial sector, which utilises around 30% of the electrical energy globally available. And, in industrial applications, electric motor driven systems represents around 68% of all energy consumption.

Furthermore, if we consider both industrial and domestic applications, including appliances in our analysis, electric motors account for more than 40% of the total energy consumed Globally.

This serves to emphasize the scale of worldwide electrical energy consumption by electric motors and the importance placed upon development of more and more efficient products, not only to fulfil but to reduce this increasing demand, and consequently achieve energy / financial savings and emissions reduction.

In response to this situation, several Government Authorities are implementing Minimum Energy Efficiency Performance Standards, in order to encourage greater utilization of high-efficient equipment.

In Europe it was no different, and motor systems were earmarked as a priority target in the Eco-Design Directive (2005), which has established requirements for Energy-using Products: “EuP Directive”.

As a result, EU Mandatory Minimum Energy-Efficiency Performance Standard (MEPS) for industrial electric motors entered into force from July 2009.

With this situation in mind WEG presents its W22 Ultra Premium IE5 efficiency motor line.

The efficiency performance of these motors far exceed the IE3 or IE4 minimum efficiency levels required in Europe today. This enables customers to reduce their Total Cost of Ownership through the reduction in energy consumption and consequently their carbon footprint.

HIGH OVERALL PERFORMANCE WHICH IS TRANSLATED INTO A LOWER TOTAL COST OF OWNERSHIP, DUE TO ITS RELIABILITY, EASY MAINTENANCE AND ENERGY SAVINGS!

W22 - Ultra Premium Efficiency - IE5 (50Hz)

Output		Frame	Full Load Torque (Nm)	Locked Rotor Current Il/In	Locked Rotor Torque Tl/Tn	Break-down Torque Tb/Tn	Inertia J (kgm²)	Allowable locked rotor time (s)		Weight (kg)	Sound dB(A)	400 V							
												Rated speed (rpm)	% of full load						Full load current In (A)
													Efficiency			Power Factor			
kW	HP							Hot	Cold				50	75	100	50	75	100	
II Poles																			
75	100	280S/M	24,5	9,0	3,5	4,0	1,62	54	119	772	77,0	2984	94,5	95,9	96,4	0,73	0,82	0,86	131
90	125	280S/M	29,4	9,5	3,4	4,1	1,71	42	92	796	77,0	2984	94,9	96,2	96,6	0,72	0,82	0,86	156
110	150	315S/M	35,9	9,5	3,3	3,8	2,98	67	147	1600	77,0	2985	95,1	96,4	96,8	0,78	0,86	0,89	184
132	175	315S/M	43,1	9,1	3,5	4,0	3,20	53	117	1643	77,0	2986	95,3	96,5	96,9	0,77	0,85	0,88	223
150	200	315S/M	48,9	9,8	3,3	3,9	3,35	43	95	1671	77,0	2985	95,5	96,6	96,9	0,78	0,86	0,89	251
160	220	315L	52,2	9,2	3,6	3,7	3,80	51	112	1750	78,0	2986	95,3	96,5	96,9	0,79	0,87	0,90	265
185	250	315L	60,4	7,9	2,8	3,0	3,93	45	99	1780	78,0	2983	95,9	96,8	97,0	0,82	0,88	0,91	303
200	270	315L	65,4	7,3	2,9	2,7	4,00	43	95	1796	78,0	2980	96,0	96,7	97,0	0,84	0,89	0,91	327
220	300	315L	71,8	9,8	3,6	3,7	4,07	29	64	1808	78,0	2986	95,8	96,8	97,0	0,77	0,86	0,89	368
250	340	315L	81,6	8,7	3,2	3,2	4,07	23	51	1809	78,0	2983	96,0	96,8	97,0	0,80	0,88	0,90	413
280	380	355M/L	91,3	9,4	2,8	3,2	5,36	35	77	2152	80,0	2987	95,6	96,7	97,0	0,83	0,88	0,90	463
300	400	355M/L	97,9	8,4	2,6	2,8	5,79	36	79	2226	80,0	2985	95,8	96,7	97,0	0,86	0,90	0,91	491
IV Poles																			
75	100	280S/M	49,0	9,9	3,5	3,7	3,38	47	103	839	69,0	1491	95,3	96,4	96,7	0,62	0,74	0,80	140
90	125	280S/M	58,8	9,0	3,7	3,9	3,38	39	86	839	69,0	1491	95,4	96,4	96,7	0,61	0,73	0,80	168
110	150	315S/M	71,8	9,5	4,0	3,8	5,18	63	139	1688	71,0	1493	95,8	96,9	97,1	0,67	0,78	0,83	197
132	175	315S/M	86,1	9,4	4,0	3,7	5,29	51	112	1702	71,0	1493	96,0	97,0	97,1	0,67	0,78	0,83	236
150	200	315L	97,9	8,6	3,9	3,5	6,06	55	121	1790	73,0	1493	96,0	96,9	97,1	0,69	0,80	0,85	262
160	220	315L	104	9,5	3,6	3,2	6,29	55	121	1817	73,0	1492	95,8	96,9	97,1	0,73	0,82	0,86	277
185	250	355M/L	121	7,3	3,7	3,9	10,5	49	108	2250	76,0	1495	96,1	97,1	97,1	0,62	0,74	0,81	340
200	270	355M/L	130	8,6	3,4	3,6	10,5	50	110	2250	76,0	1495	95,8	97,0	97,1	0,64	0,76	0,82	363
220	300	355M/L	143	7,8	3,1	3,2	10,2	52	114	2268	76,0	1494	96,1	97,1	97,1	0,68	0,78	0,83	394
250	340	355M/L	163	8,9	3,5	3,6	11,2	36	79	2320	76,0	1494	95,9	97,0	97,1	0,64	0,75	0,81	459
280	380	355M/L	183	7,8	3,0	3,1	11,6	38	84	2357	76,0	1493	96,2	97,1	97,1	0,69	0,79	0,83	501
300	400	355M/L	196	7,3	2,8	2,9	11,6	34	75	2321	76,0	1492	96,3	97,1	97,1	0,71	0,80	0,84	531
315	430	355M/L	206	7,1	2,7	2,8	11,6	33	73	2356	76,0	1492	96,4	97,1	97,1	0,72	0,81	0,84	557
VI Poles																			
45	60	280S/M	44,2	8,5	3,2	3,4	4,14	57	125	745	65,0	992	94,9	95,9	95,9	0,58	0,71	0,77	88,0
55	75	280S/M	54,0	8,5	3,2	3,4	4,47	51	112	781	65,0	992	95,2	96,0	96,0	0,59	0,71	0,78	106
75	100	315S/M	73,4	8,7	3,3	3,8	8,12	65	143	1639	67,0	995	94,7	96,0	96,2	0,55	0,68	0,76	148
90	125	315S/M	88,1	8,4	3,2	3,6	8,48	57	125	1669	67,0	995	94,9	96,2	96,3	0,57	0,70	0,77	175
110	150	315L	108	8,4	3,7	4,0	10,7	54	119	1831	68,0	995	94,7	96,3	96,4	0,55	0,68	0,76	217
132	175	315L	129	7,0	3,1	3,4	10,7	46	101	1830	68,0	994	95,3	96,4	96,4	0,61	0,73	0,80	247
150	200	355M/L	147	7,0	2,6	3,0	12,9	62	136	2196	73,0	995	94,6	96,0	96,4	0,58	0,70	0,76	296
185	250	355M/L	181	6,9	2,6	3,0	14,1	77	169	2286	73,0	995	94,7	96,1	96,5	0,58	0,70	0,76	364
200	270	355M/L	196	6,2	2,2	2,6	15,0	70	154	2358	73,0	995	95,2	96,3	96,5	0,63	0,74	0,79	379
220	300	355M/L	215	6,6	2,5	2,8	15,0	70	154	2358	73,0	995	95,0	96,2	96,5	0,60	0,72	0,78	422

Note: IE1 and IE2 motors available under request.

W22 - Ultra Premium Efficiency - IE5 (60Hz)

Output		Frame	Full Load Torque (Nm)	Locked Rotor Current Il/In	Locked Rotor Torque Tl/Tn	Break-down Torque Tb/Tn	Inertia J (kgm²)	Allowable locked rotor time (s)		Weight (kg)	Sound dB(A)	460 V							
												Rated speed (rpm)	% of full load						Full load current In (A)
													Efficiency			Power Factor			
kW	HP							Hot	Cold				50	75	100	50	75	100	
II Poles																			
75	100	280S/M	24,5	9,0	3,5	4,0	1,62	54	119	772	77,0	3586	93,6	95,4	96,2	0,70	0,80	0,85	115
90	125	280S/M	29,4	9,5	3,4	4,1	1,71	42	92	796	77,0	3586	94,1	95,8	96,5	0,70	0,80	0,85	138
110	150	315S/M	35,9	9,5	3,3	3,8	2,98	67	147	1600	77,0	3587	94,8	96,2	96,5	0,76	0,84	0,88	163
132	175	315S/M	43,1	9,1	3,5	4,0	3,20	53	117	1643	77,0	3588	95,1	96,4	96,8	0,75	0,84	0,87	197
150	200	315S/M	48,9	9,8	3,3	3,9	3,35	43	95	1671	77,0	3587	95,4	96,6	96,8	0,76	0,84	0,88	221
160	220	315L	52,2	9,2	3,6	3,7	3,80	51	112	1750	78,0	3588	93,6	95,6	96,8	0,77	0,85	0,89	233
185	250	315L	60,4	7,9	2,8	3,0	3,93	45	99	1780	78,0	3585	95,2	96,6	96,8	0,80	0,87	0,90	267
200	270	315L	65,4	7,3	2,9	2,7	4,00	43	95	1796	78,0	3583	95,5	96,7	96,8	0,82	0,89	0,91	285
220	300	315L	71,8	9,8	3,6	3,7	4,07	29	64	1808	78,0	3587	95,1	96,6	96,8	0,75	0,84	0,88	324
250	340	315L	81,6	8,7	3,2	3,2	4,07	23	51	1809	78,0	3585	95,4	96,4	96,8	0,78	0,86	0,89	364
280	380	355M/L	91,3	9,4	2,8	3,2	5,36	35	77	2152	80,0	3588	94,8	96,4	96,8	0,82	0,88	0,90	403
300	400	355M/L	97,9	8,4	2,6	2,8	5,79	36	79	2226	80,0	3587	95,1	96,5	96,8	0,85	0,89	0,91	427
IV Poles																			
75	100	280S/M	49,0	9,9	3,5	3,7	3,38	47	103	839	69,0	1792	95,3	96,3	96,5	0,59	0,71	0,78	125
90	125	280S/M	58,8	9,0	3,7	3,9	3,38	39	86	839	69,0	1792	95,7	96,5	96,5	0,58	0,71	0,78	150
110	150	315S/M	71,8	9,5	4,0	3,8	5,18	63	139	1688	71,0	1794	95,4	96,7	96,8	0,64	0,76	0,82	174
132	175	315S/M	86,1	9,4	4,0	3,7	5,29	51	112	1702	71,0	1794	95,6	96,8	96,8	0,64	0,76	0,82	209
150	200	315L	97,9	8,6	3,9	3,5	6,06	55	121	1790	73,0	1794	95,2	96,5	96,8	0,67	0,78	0,83	234
160	220	315L	104	9,5	3,6	3,2	6,29	55	121	1817	73,0	1794	94,9	96,4	96,8	0,63	0,75	0,82	253
185	250	355M/L	121	7,3	3,7	3,9	10,5	49	108	2250	76,0	1796	95,5	96,8	96,8	0,59	0,72	0,79	304
200	270	355M/L	130	8,6	3,4	3,6	10,5	50	110	2250	76,0	1795	95,2	96,7	96,8	0,62	0,74	0,81	320
220	300	355M/L	143	7,8	3,1	3,2	10,2	52	114	2268	76,0	1794	95,5	96,8	96,8	0,65	0,76	0,81	352
250	340	355M/L	163	8,9	3,5	3,6	11,2	36	79	2320	76,0	1795	95,4	96,8	96,8	0,61	0,73	0,79	410
280	380	355M/L	183	7,8	3,0	3,1	11,6	38	84	2357	76,0	1794	95,8	96,8	96,8	0,66	0,77	0,82	443
300	400	355M/L	196	7,3	2,8	2,9	11,6	34	75	2321	76,0	1793	96,0	96,8	96,8	0,68	0,78	0,83	469
315	430	355M/L	206	7,1	2,7	2,8	11,6	33	73	2356	76,0	1793	96,1	96,8	96,8	0,70	0,79	0,83	492
VI Poles																			
45	60	280S/M	44,2	8,5	3,2	3,4	4,14	57	125	745	65,0	1193	94,1	95,5	95,8	0,56	0,68	0,76	77,6
55	75	280S/M	54,0	8,5	3,2	3,4	4,47	51	112	781	65,0	1193	94,4	95,7	95,8	0,57	0,69	0,76	94,8
75	100	315S/M	73,4	8,7	3,3	3,8	8,12	65	143	1639	67,0	1196	94,4	95,8	95,8	0,52	0,66	0,73	135
90	125	315S/M	88,1	8,4	3,2	3,6	8,48	57	125	1669	67,0	1195	94,7	96,1	96,2	0,54	0,67	0,75	157
110	150	315L	108	8,4	3,7	4,0	10,7	54	119	1831	68,0	1196	94,2	95,9	96,2	0,52	0,66	0,74	194
132	175	315L	129	7,0	3,1	3,4	10,7	46	101	1830	68,0	1195	95,0	96,2	96,2	0,58	0,71	0,78	221
150	200	355M/L	147	7,0	2,6	3,0	12,9	62	136	2196	73,0	1196	93,9	95,8	96,2	0,54	0,67	0,74	264
185	250	355M/L	181	6,9	2,6	3,0	14,1	77	169	2286	73,0	1196	94,2	96,0	96,2	0,55	0,67	0,74	326
200	270	355M/L	196	6,2	2,2	2,6	15,0	70	154	2358	73,0	1195	94,7	96,2	96,2	0,60	0,72	0,78	335
220	300	355M/L	215	6,6	2,5	2,8	15,0	70	154	2358	73,0	1195	94,5	96,1	96,2	0,57	0,70	0,76	378

Note: IE1 and IE2 motors available under request.

18. Mechanical Data

Foot Mounted Motors, Terminal Box Top

Frames 63 to L132M/L

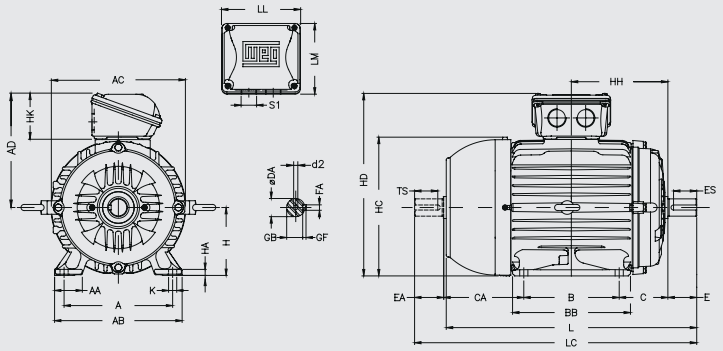

For frames 132S, 132M/L and 132M, the eyebolt will be fitted at 50°.

Frames 160M to 200L

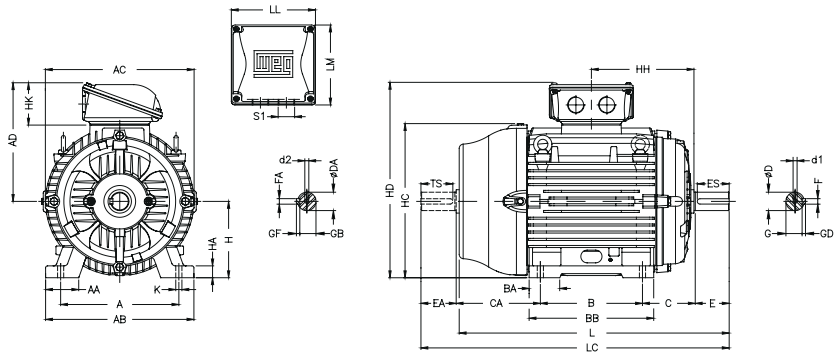

Frames 225 to 355M/L*

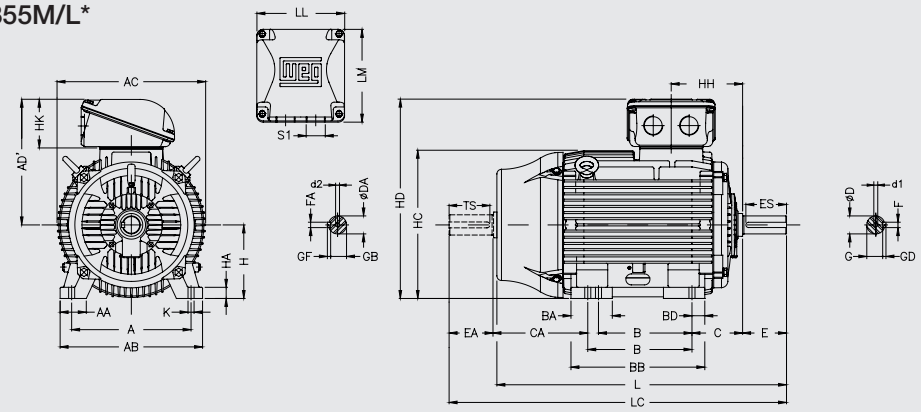

Frame 355A/B*

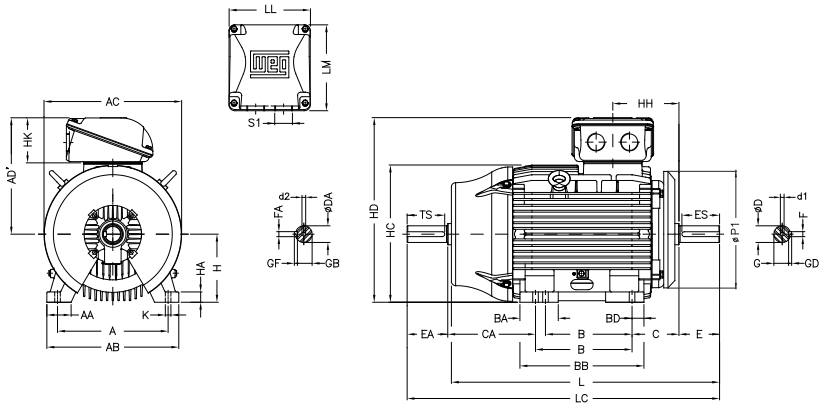

**Some outputs in frame sizes 315 and 355 are equipped with an air deflector at the DE. In this case the dimension P1 will be 780mm and 880mm for frames 315 and 355 respectively.*

Frame	A	AA	AB	AC	AD	AD'	B	BA	BB	BD	C	CA	DE Shaft end						NDE Shaft end					
													D	E	ES	F	G	GD	DA	EA	FA	TS	GB	GF
63	100	25,5	116	125	123	-	80	-	95	-	40	78	11j6	23	14	4	8,5	4	9j6	20	3	12	7,2	3
71	112	28,5	132	141	131		90		113,5		45	88	14j6	30	18	5	11	5	11j6	23	4	14	8,5	4
80	125	30,5	149	159	140		100		125,5		50	93	19j6	40	28	6	15,5	6	14j6	30	5	18	11	5
L80												118												
90S	140	37	164	179	149				131		56	135	24j6	50	36	8	20	7	16j6	40		28	13	
L90S																								
90L							125		156															
L90L																								
100L	160	40	188	206	159		140		173		63	118	28j6	60	45		24		22j6	50	6	36	18,5	6
L100L												162												
112M	190	40,5	220	226	192				177		70	128							24j6		8		20	7
L112M												158												
132S	216	45,5	248	272	220				187		89	150	38k6	80	63	10	33	8	28j6	60		45	24	
L132S																								
132M							178		225															
132M/L							178/203		250															
L132M/L																								
160M	254	44	292	329	266		210	63	254		108	174	42k6	110	80	12	37	8	42k6	110	12	80	37	8
160L							254		298															
L160L																								
180M	279	78	350	360	281		241	70	294		121	200	48k6			14	42,5	9	48k6		14		42,5	9
L180M																								
180L							279		332															
L180L																								
200L	318	82	385	402	319		305	82	370		133	222	55m6			16	49	10						
225S/M*	356	80	436	455	-	384	286/311	124	412	41	149	319/294	55m6		100				55m6		16	100	49	10
225S/M													60m6	140	125	18	53	11	60m6	140	18	125	53	11
250S/M*	406	100	506	486		398	311/349	146	467	59	168	354/316	60m6				53	11	60m6					
250S/M													65m6				58							
280S/M*	457		557	599		472	368/419	151	517	49	190	385/334	65m6			18	58	11	60m6					
280S/M													75m6			20	67,5	12	65m6				58	
315S/M*	508	120	630	657		530	406/457	184	626	70	216	443/494	65m6	140	125	18	58	11	60m6				53	
315S/M													80m6	170	160	22	71	14	65m6				58	
315L*						576	508	219	752	81	216	502	65m6	140	125	18	58	11	60m6				53	
315L													80m6	170	160	22	71	14	65m6				58	
355M/L*	610	140	750	736		620	560/630	230	760	65	254	483/413	75m6	140	125	20	67,5	12	60m6				53	11
355M/L													100m6	210	200	28	90	16	80m6	170	22	160	71	14
355A/B*						609	710/800	325	965	70	254	528/438	75m6	140	125	20	67,5	12	60m6	140	18	125	53	11
355A/B													100m6	210	200	28	90	16	80m6	170	22	160	71	14

Frame	H	HA	HC	HD	HH	HK	L	LC	LL	LM	S1	K	D1	D2	Bearing	
															DE	NDE
63	63	7	130	186	80	59	216	241	108	98	2xM20x1,5	7	EM4	EM3	6201 ZZ	6201 ZZ
71	71		145	202	90		250	276					DM5	EM4	6202 ZZ	6202 ZZ
80	80	8	163	220	100		277	313				10	DM6	DM5	6204 ZZ	6203 ZZ
L80							301	338								
90S	90	9	182	239	106		305	350			2xM25x1,5		DM8	DM6	6205 ZZ	6204 ZZ
L90S							334,5	381								
90L					118,5		329	375								
L90L							360	406								
100L	100	10	203	259	133		376	431				12	DM10	DM8	6206 ZZ	6205 ZZ
L100L							418	475								
112M	112		226	304	140	80	394	448	140	133	2xM32x1,5				6207 ZZ	6206 ZZ
L112M							423	478								
132S	132	16	274	352	159		452	519					DM12	DM10	6308 ZZ	6207 ZZ
L132S							476	544								
132M					178		489	557								
132M/L					190,5		515	582								
L132M/L							538,5	607								
160M	160	17	331	426	213	101	598	712	198,5	190	2xM40x1,5	14,5	DM16	DM16	6309 ZZ-C3	6209 ZZ-C3
160L					235		642	756								
L160L							676	790								
180M	180	28	366	461	241,5		664	782							6311 ZZ-C3	6211 ZZ-C3
L180M							706	824							6311 ZZ-C3	6211 ZZ-C3
180L					260,5		702	820							6311 ZZ-C3	6211 ZZ-C3
L180L							744	862								
200L	200	30	407	519	285,5	120	767	880	230	220					6312 ZZ-C3	6212 ZZ-C3
225S/M*	225	34	453	609	212	153	856	974	269	285	2xM50x1,5	18,5	DM20	DM20	6314 C3	6314 C3
225S/M							886	1034								
250S/M*	250	43	493	648	214	153	965	1113			2xM63x1,5	24				
250S/M																
280S/M*	280	32	580	752	266	152	1071	1223	314	312						
280S/M															6316 C3	6316 C3
315S/M*	315	48	644	845	264	176	1244	1392	379	382		28			6314 C3	6314 C3
315S/M							1274	1426							6319 C3	6316 C3
315L*				891	285	220	1355	1506	404	436					6314 C3	6314 C3
315L							1385	1536							6319 C3	6316 C3
355M/L*	355	50	723	975	339		1412	1577			2xM80x2		DM20		6316 C3	6314 C3
355M/L							1482	1677					DM24		6322 C3	6319 C3
355A/B*				1083	340	328	1607	1772	460	544			DM20		6316 C3	6314 C3
355A/B							1677	1872					DM24		6322 C3	6319 C3

Notes:
(*) Dimension applicable to 2 pole motors.
(**) All dimensions are in mm.

Foot mounted motors, Terminal Box Left or Right Side

Frames 63 to 132M/L

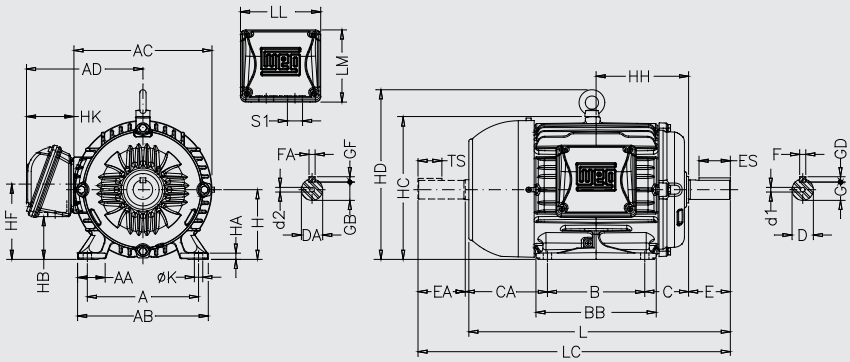

Frames 160M to 200L

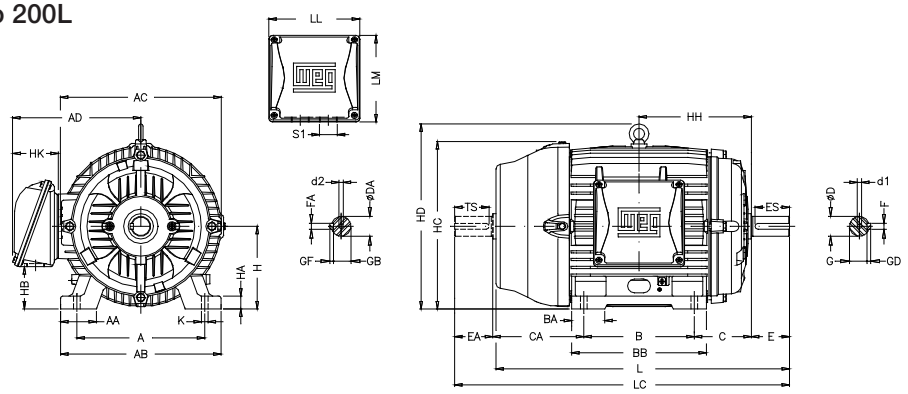

Frames 225 to 355M/L*

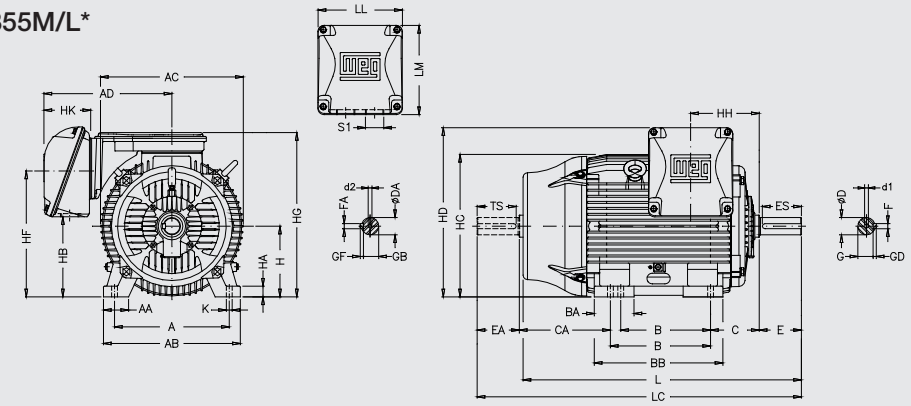

Frame 355A/B*

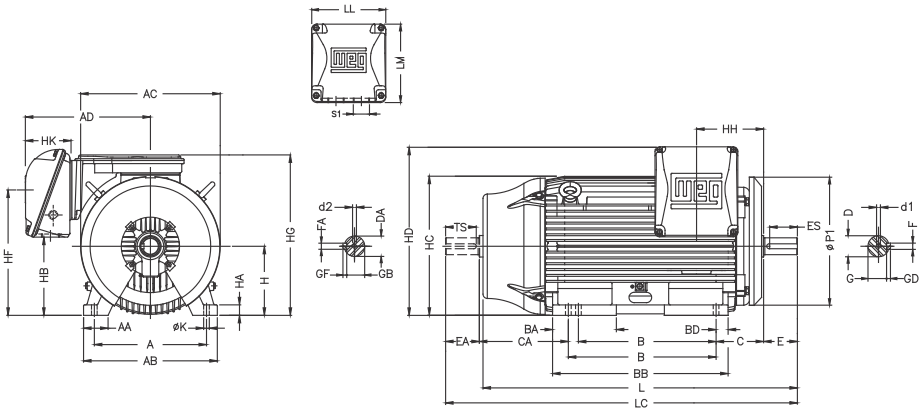

** Some outputs in frame sizes 315 and 355 are equipped with an air deflector at the D.E. In this case the dimension P1 will be 780mm and 880mm for frames 315 and 355 respectively*

Frame	A	AA	AB	AC	AD	B	BA	BB	BD	C	CA	DE Shaft						NDE Shaft					
												D	E	ES	F	G	GD	DA	EA	TS	FA	GB	GF
63	100	25,5	116	125	123	80	-	95	-	40	78	11j6	23	14	4	8,5	4	9j6	20	12	3	7,2	3
71	112	28,5	132	141	131	90		113,5		45	88	14j6	30	18	5	11	5	11j6	23	14	4	8,5	4
80	125	30,5	149	159	140	100		125,5		50	93	19j6	40	28	6	15,5	6	14j6	30	18	5	11	5
L80											142												
90S	140	37	164	179	149			131		56	135	24j6	50	36	8	20	7	16j6	40	28		13	
L90S																							
90L						125		156															
L90L																							
100L	160	40	188	206	159	140		173		63	118	28j6	60	45		24		22j6	50	36	6	18,5	6
L100L											162												
112M	190	40,5	220	215	192			177		70	128							24j6			8	20	7
L112M											158												
132S	216	45,5	248	272	220			187		89	150	38k6	80	63	10	33	8	28j6	60	45		24	
L132S																							
132M						178		225															
132M/L						178/203		250															
L132M/L																							
160M	254	44	292	329	266	210	63	254		108	174	42k6	110	80	12	37		42k6	110	80	12	37	8
160L						254		298															
L160L																							
180M	279	78	350	360	281	241	70	294		121	200	48k6			14	42,5	9	48k6			14	42,5	9
L180M																							
180L						279		332															
L180L																							
200L	318	82	385	402	319	305	82	370		133	222	55m6			16	49	10						
225S/M*	356	80	436	455	410	286/311	124	412	41	149	319/294			100				55m6		100	16	49	10
225S/M												60m6	140	125	18	53	11	60m6	140	125	18	53	11
250S/M*	406	100	506	486		311/349	146	467	59	168	354/316												
250S/M												65m6				58							
280S/M*	457		557	599	445	368/419	151	517	49	190	385/334				20	67,5	12	65m6				58	
280S/M												75m6											
315S/M*	508	120	630	657	525	406/457	184	626	70	216	494/443	65m6		125	18	58	11	60m6				53	
315S/M												80m6	170	160	22	71	14	65m6				58	
315L*					589	508	219	752	81		443/494	65m6	140	125	18	58	11	60m6				53	
315L												80m6	170	160	22	71	14	65m6				58	
355M/L*	610	140	750	736	609	560/630	230	760	65	254	483/413	75m6	140	125	20	67,5	12	60m6	140	125	18	53	
355M/L												100m6	210	200	28	90	16	80m6	170	160	22	71	14
355A/B*						710/800	325	955	70		528/438	75m6	140	125	20	67,5	12	60m6	140	125	18	53	11
355A/B												100m6	210	200	28	90	16	80m6	170	160	22	71	14

Frame	H	HA	HB	HC	HD	HF	HG	HH	HK	LL	LM	K	L	LC	S1	d1	d2	Bearing	
																		DE	NDE
63	63	7	25,5	130	156,3	68,5	-	80	59	108	98	7	216	241	2xM20x1,5	EM4	EM3	6201 ZZ	6201 ZZ
71	71		33	145	163,8	76		90					250	276		DM5	EM4	6202 ZZ	6202 ZZ
80	80	8	43,5	163	174,3	87		100				10	277	313		DM6	DM4	6204 ZZ	6203 ZZ
L80													325	360					
90S	90	9	47	182	182,4	90		106					305	350	2xM25x1,5	DM8	DM6	6205 ZZ	6204 ZZ
L90S													334,5	381					
90L								118,5					329	375					
L90L													360	406					
100L	100	10	65	205	244	106,4		133				12	376	431		DM10	DM8	6206 ZZ	6205 ZZ
L100L													418	475					
112M	112		54,5	235	280	112		140	80	140	133		394	448	2xM32x1,5			6207 ZZ	6206 ZZ
L112M													423	478					
132S	132	16	75	274	319	132		159					452	519		DM12	DM10	6308 ZZ	6207 ZZ
L132S													476	544					
132M								178					489	557					
132M/L								190,5					515	582					
L132M/L													538,5	607					
160M	160	17	79	331	380	-		213	101	198,5	190	14,5	598	712	2xM40x1,5	DM16	DM16	6309 ZZ-C3	6209 ZZ-C3
160L								235					642	756					
L160L													676	790					
180M	180	28	92	366	413			241,5					664	782				6311 ZZ-C3	6211 ZZ-C3
L180M													706	824				6311 C3	6211 ZZ-C3
180L								260,5					702	820				6311 ZZ-C3	6211 ZZ-C3
L180L													744	862					
200L	200	30	119	407	464			285,5	119,5	230	220	18,5	767	880	2xM50x1,5	DM20	DM20	6312 ZZ-C3	6212 ZZ-C3
225S/M*	225	34	255	453	541	421	534	212	153	269	285		856	974				6314 C3	6314 C3
225S/M													886	1034					
250S/M*	250	43	297	493	583	463	577	214				24	965	1113	2xM63x1,5				
250S/M																			
280S/M*	280	32	386	580	700	572	686	266	152	314	312		1071	1223					
280S/M																		6316 C3	6316 C3
315S/M*	315	48	336	644	768	592	751	264	176	379	382	28	1244	1392				6314 C3	6314 C3
315S/M													1274	1426				6319 C3	6316 C3
315L*					774	575	760	285	220	404	436		1355	1506				6314 C3	6314 C3
315L													1385	1536				6319 C3	6316 C3
355M/L*	355	50	461	723	898	700	885	339					1412	1577	2xM80x2	DM20		6316 C3	6314 C3
355M/L													1482	1677		DM24		6322 C3	6319 C3
355A/B*					949			340	328	460	544		1607	1772		DM20		6316 C3	6314 C3
355A/B													1677	1872		DM24		6322 C3	6319 C3

Notes:
(*) Dimension applicable to 2 pole motors.
(**) All dimensions are in mm.

Flange Mounted Motors

“FF” Flange

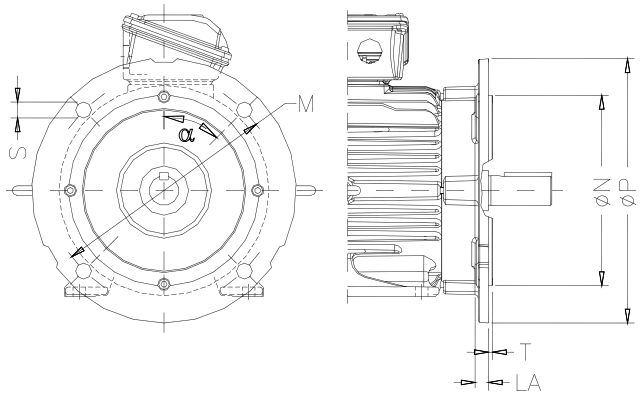

Frame	Flange	LA	M	N	P	S	T	α	N° of holes
63	FF-115	5,5	115	95	140	10	3	45°	4
71	FF-130	7	130	110	160		3,5		
80	FF-165	9	165	130	200	12			
90		10							
100	FF-215	12,5	215	180	250	15	4		
112									
132	FF-265	12	265	230	300				
160	FF-300	18	300	250	350	19	5		
180									
200	FF-350		350	300	400				
225	FF-400		400	350	450				
250	FF-500	20	500	450	550			22°30’	8
280		18							
280	FF-600	22	600	550	660/780*	24	6		
315S/M									
315L		16							
355	FF-740	22	740	680	800/880*				

*Only for motors fitted with air deflector in drive end side.
** Dimensions are in mm.

“C-DIN” Flange

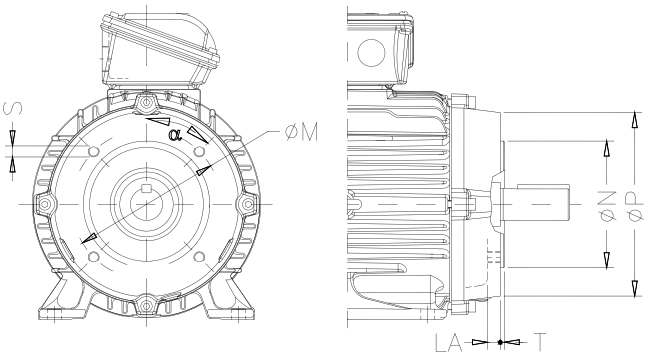

Frame	Flange	LA	M	N	P	S	T	α	N° of holes
63	C-90	9,5	75	60	90	M5	2,5	45°	4
71	C-105	8	85	70	105	M6			
80	C-120	10,5	100	80	120		3		
90	C-140	10,5	115	95	140	M8			
100	C-160	12	130	110	160		3,5		
112		13,5							
132	C-200	15,5	165	130	200	M10			

* Dimensions are in mm.

“NEMA C” Flange

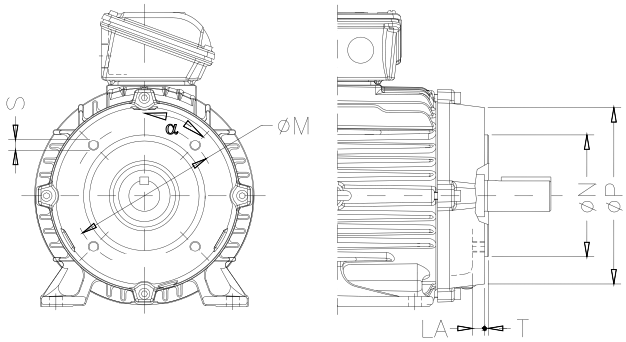

Frame	Flange	LA	M	N	P	S	T	α	N° of holes
63	FC-95	4,5	95,2	76,2	143	UNC 1/4”x20	4	45°	4
71		10							
80									
90	FC-149	15	149,2	114,3	165	UNC 3/8”x16			
100		12							
112	FC-184	13,5	215,9	184,2	225	UNC 1/2”x13	6,3		
132		15,5							
160		26							
180	FC-228	20	266,7	228,6	280				
200									
225	FC-279	25	317,5	279,4	395	UNC 5/8”x11		22°30’	8
250	FC-355		406,4	355,6	455				
280									
315S/M	FC-368		419,1	368,3					
315L		18,5							
355M/L		40							
355A/B		33,5							

*Dimensions are in mm.

Dimensions for motors with terminal box base

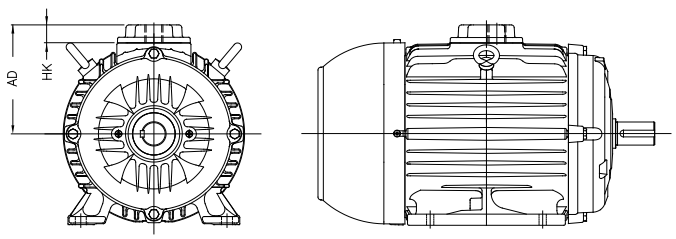

Frame	Threaded hole <= M20 or 1/2”		Threaded hole > M20 or 1/2”	
	HK	AD	HK	AD
63	40	106	40	106
71		114		114
80	20	103	30	113
90		113		123
100		123		133
112	25	140	45	160
132		168		188

The optional terminal box base is not available in B30D, B30E, and B30T mountings.
*Dimensions are in mm.

19. Terminal Box Drawings

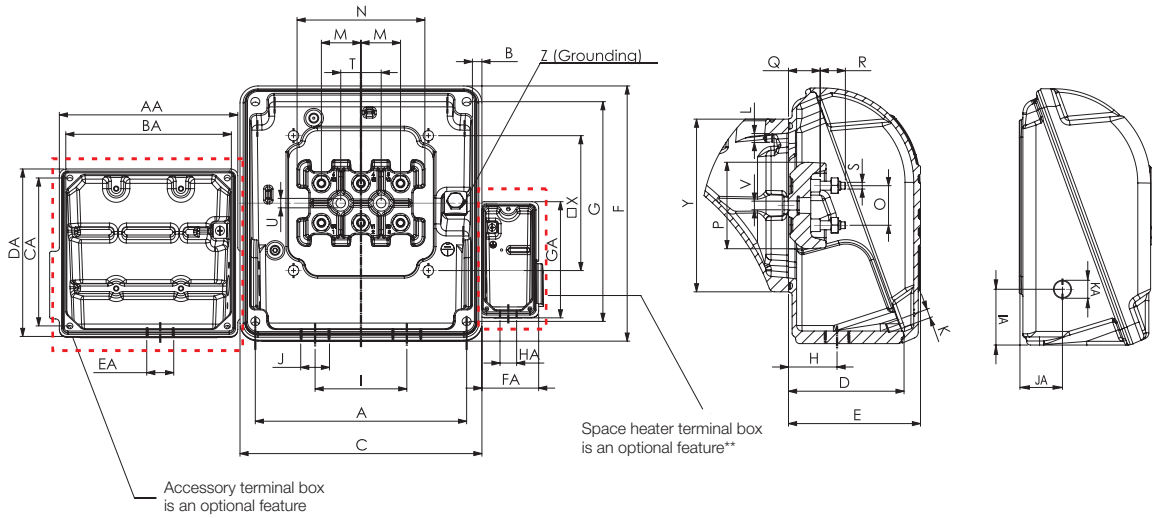

Frame	A	B	C	D	E	F	G	H	I	J	K	L	M	N	O	P	Q	R	S	T	U
63	90	3,5	108	51,5	59	98	85	27	42	2xM20x1,5	M5x0,8	M5x0,8	16	75	16	35	13,5	12	M4x0,7	20	5,8
71																					
80																					
90										2xM25x1,5											
100																					
112	117	2,5	140	71	80	133	117	36,5	54	2xM32x1,5	M6x1,0	M6x1,0	23		23	52	17	16	M5x0,8	23	6,5
132																					
160	175	4	198,5	90	101	190	175	46	84	2xM40x1,5	M8x1,25	M8x1,25	28	90	28	60	21,5	20,5	M6x1	28	6,6
180																					
200	204	4,5	230	107	119,5	220	204	59	94	2xM50x1,5			35	112	35	74	24	24	M8x1,25	35	9,5
225S/M	235	12,5	269	133	153	285	260	71	110		M10x1,5	M10x1,5	44	140	44	94	28	28	M10x1,5	45	10,5
250S/M										2xM63x1,5											
280S/M	275	13,5	314		152	312	275		126		M12x1,75	M12x1,75	45	153	45	108	34	40	M12x1,75		
315S/M	340	14,5	379	162	176	382	345	78	160												
315L	365		404	202	220	436	390	97	200			M14x2,0	65	210	65	146	48	48	M16x2,0	65	
355M/L																					
355A/B	415	-	460	267 232*	328	544	678	187 152(*)	140		M10x1,5	M12x1,75	80	-	105	-	-	-	M16x2,5	-	-

Frame	V	X	Y	Z	AA	BA	CA	DA	EA	FA	GA	HA	IA	JA	KA	Max number of connectors		
																Main	Accessories	Space heater
63	M5x0,8	56	77	0,5-6 mm²	109	90	85	98	M20x1,5	68	101,4	M20x1,5	23	17,5	M20x1,5	4	16	4
71			78															
80			81															
90			77										25	22,5				
100			81															
112		70	107	2-10 mm²									35	20		6		
132			103															
160	M6x1,0	110	140	5,2-25 mm²	139	117	117	133					47	40		15	26	
180																		
200	M8x1,25	120	155	5,2-35 mm²									47	45				
225S/M	M10x1,5	150	192	25-50 mm²							131,2		62	48				
250S/M			197															
280S/M			204	35-70 mm²									77	56				
315S/M		200	260										82	69				
315L		260	300	85-120 mm²									97	79				
355M/L																		
355A/B	-	290											57	95				

Notes:
(*) Dimension is applicable to top, right or left terminal box mounting
(**) Space heater terminal box is a special feature for frame sizes 63 to 112.
(***) Dimensions are in mm.

20. Drip Cover Data

Utilization of a drip cover / impact canopy increases the total length of the motor. The additional land length can be seen at table 22.

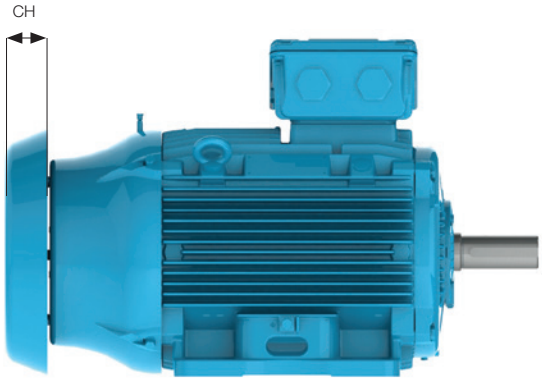

Figure 34 -Motor with drip cover

Frame	Dimension CH (increase motor length (mm))
63	18
71	
80	
90	
100	28
112	31
132	
160	47
180	57
200	67
225S/M	81
250S/M	
280S/M	91
315S/M	
315L	
355M/L	
355A/B	

Table 22 -Drip cover dimensions

21. External Motor Dimensions with Forced Ventilation

The use of forced ventilation increases the overall motor length, according to the table below.

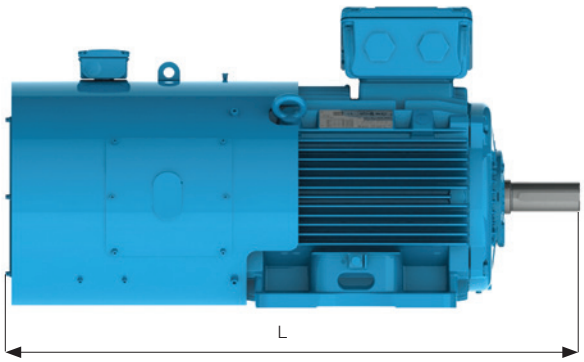

Figure 35 -Motor with forced ventilation

Frame size	Poles	Total motor length in mm (L)	
		Without forced ventilation	With forced ventilation
90S	All	304	548
L90S	All	335	579
90L	All	329	573
L90L	All	360	604
100L	All	376	646
L100L	All	418	690
112M	All	394	660
L112M	All	423	690
132S	All	452	715
132M	All	489	753
132M/L	All	515	778
160M	All	598	855
160L	All	642	899
180M	All	664	908
180L	All	702	946
200M	All	729	976
200L	All	767	1014
225S/M	2	856	1140
	4/8	886	1170
250S/M	2	965	1217
	4/8	965	1217
280S/M	2	1071	1348
	4/8	1071	1348
315S/M	2	1244	1459
	4/8	1274	1489
315L	2	1353	1568
	4/8	1389	1598
355M/L	2	1412	1786
	4/8	1482	1856
355A/B	2	1607	1981
	4/8	1677	2051

Table 23 -Forced ventilation dimensions

22. Silencer

The silencer for W22 motors reduces the noise level up to 5 dB(A), and it is available on 225 to 355 frames for foot-mounted and flange-mounted motors.
It is made of 2 mm steel or stainless steel plate and is internally covered by a sound absorbing material.
For foot-mounted the silencer fits loosely over the motor, and has a rubber strip to seal against the floor.

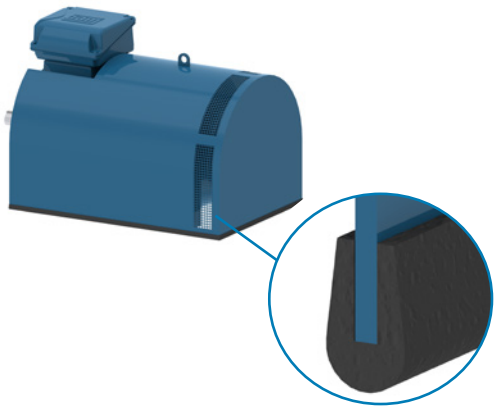

Figure 36 -Silencer for W22 motors.

Silencer dimensional

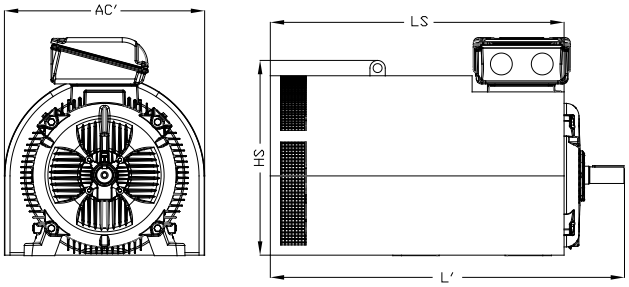

Frame	AC'	L'	LS	HS
225S/M	564	955*	760	567
		985		
250S/M	604	1065	830	612
280S/M	704	1205	950	687
315S/M	784	1387*	1150	762
		1417		
355M/L	854	1587*	1305	834
		1657		
355A/B	854	1782*	1500	834
		1852		

Table 24 -Silencer dimensional

* Dimension for 2-pole motors.

** Dimensions are in mm.

23. Leveling screws and dowel pins

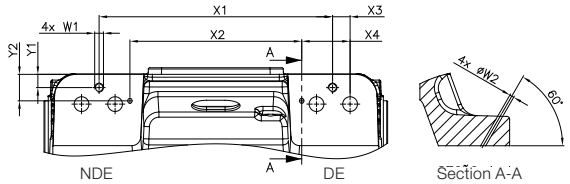

Figure 37 -Dimensions for motors with dowel pins and leveling screws

Frame	Threaded hole W1	Ø W2	X1	X2	X3	X4	Y1	Y2
160 M	M10x1,5	5	160	126	25	42	10	25
160 L	M10x1,5	5	204	170	25	42	10	25
180 M	M10x1,5	5	201	171	20	35	15	30
180 L	M10x1,5	5	239	209	20	35	15	30
200 M	M10x1,5	5	227	197	20	35	15	30
200 L	M10x1,5	5	265	235	20	35	15	30
225 S/M	M12x1,75	5	311	201	25	65	20	35
250 S/M	M12x1,75	5	349	219	25	65	20	35
280 S/M	M16x2,0	5	369	259	25	85	20	35
315 S/M	M16x2,0	5	457	281	50	100	30	50
315L	M16x2,0	5	508	361	50	115	30	50
355 M/L	M16x2,0	5	530	350	50	140	30	50
355 A/B	M16x2,0	5	710	545	50	140	30	50

Table 25 -Dimensions for motors with dowel pins and leveling screws

** Dimensions are in mm.*

24. Packaging

24.1. Frames 63 to 132

W22 motors in frames 63 to 132 are packaged in cardboard boxes (see figure 38), following the dimensions, weights and volumes of the tables 26 and 27.

Figure 38 -Cardboard box

Frame	External height (m)	External width (m)	External lenght (m)	Weight (kg)	Volume (m³)
63	0,26	0,21	0,30	0,2	0,02
71					
80	0,27	0,26	0,36	0,7	0,02
L80	0,32	0,27	0,43	0,9	0,04
90S					
90L					
L90S					
L90L					
100L	0,33	0,27	0,46	1,4	0,04
L100L					
112M	0,36	0,30	0,46	1,5	0,05
L112M	0,42	0,33	0,60	1,5	0,08
132S	0,42	0,33	0,60	1,7	0,08
132M					
132M/L					

Table 26 -Cardboard box dimensions, weights and volumes for top mounting.

Frame	External height (m)	External width (m)	External length (m)	Weight (kg)	Volume (m³)
63	0,20	0,24	0,28	0,2	0,01
71	0,20	0,28	0,30	0,2	0,01
80	0,21	0,28	0,36	0,7	0,02
L80	0,24	0,32	0,40	0,8	0,03
90S					
L90S					
90L					
L90L	0,26	0,34	0,43	1,0	0,04
100L	0,27	0,35	0,46	1,6	0,04
L100L	0,32	0,37	0,50	1,4	0,06
112M	0,31	0,38	0,46	1,7	0,05
L112M	0,31	0,38	0,53	1,5	0,06
132S	0,35	0,48	0,60	2,1	0,10
132M					
132M/L					

Table 27 -Cardboard box dimensions, weights and volumes for side mounting.

Note: Values to be added to the net motor weight.

25. Frames 160 to 355A/B

For frames 160 to 355A/B, the motors are packaged in wooden crates (figure 39). Dimensions, weights and volumes are in tables 28 and 29.

Figure 39 -Wooden crates

Note: Values to be added to the net motor weight.

Frame	External height (m)	External width (m)	External length (m)	Weight (kg)	Volume (m³)
160	0,50	0,40	0,74	9,2	0,15
180	0,53	0,43	0,82	12,3	0,19
200	0,59	0,51	0,88	13,5	0,27
225S/M	0,90	0,85	1,15	51,9	0,88
250S/M	0,90	0,85	1,25	54,6	0,96
280S/M	1,13	0,85	1,40	67,9	1,34
315S/M	1,13	0,85	1,55	69,9	1,49
315L	1,20	0,90	1,70	111	1,84
355M/L	1,32	1,05	1,73	127	2,40
355A/B	1,32	1,05	1,90	141	2,63

Table 28 -Wooden crates dimensions, weights and volumes for top mounting.

Frame	External height (m)	External width (m)	External length (m)	Weight (kg)	Volume (m³)
160	0,40	0,51	0,74	9,85	0,15
180	0,45	0,57	0,82	13,42	0,21
200	0,49	0,63	0,88	14,58	0,27
225S/M	0,78	0,85	1,15	47,70	0,76
250S/M	0,90	0,85	1,25	52,20	0,96
280S/M	0,95	0,95	1,40	71,60	1,26
315S/M	1,13	1,10	1,75	88,40	2,18
315L	1,10	1,12	1,70	138,37	2,10
355M/L	1,20	1,19	1,72	146,00	2,46
355A/B	1,20	1,19	1,90	163,00	2,71

Table 29 -Wooden crates dimensions, weights and volumes for side mounting.

Note: Values to be added to the net motor weight.

26. Spare Parts

26.1. General Information

The following information is required when purchasing of spare parts:
- Serial number and manufacturing date, both stamped in the nameplate
- Spare part description
- Codes shown are for reference only. Final codes of spare parts will depend on colour

Spare Parts Available 63-112

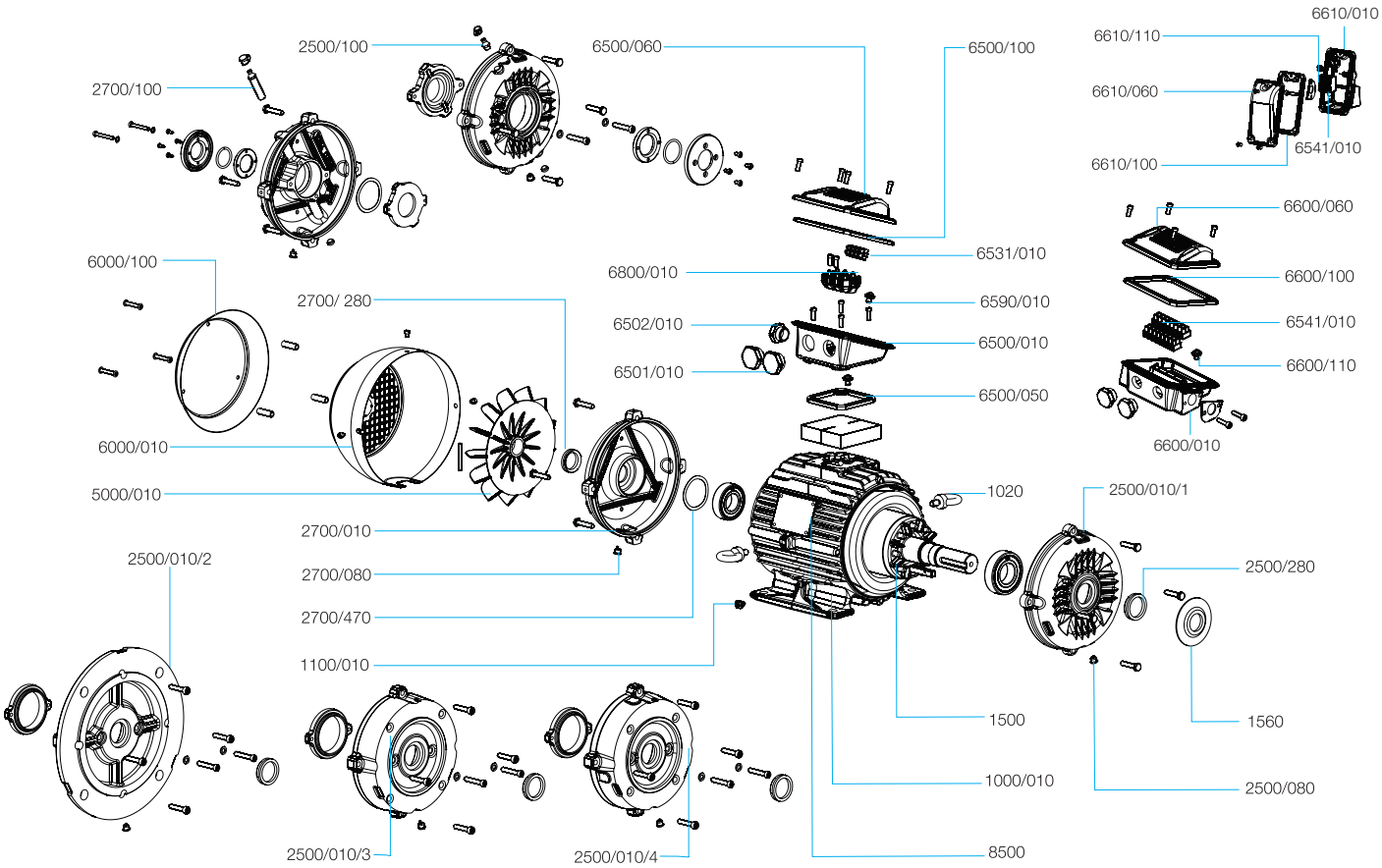

Component		Spare part	
Item	Description	Item	Composition
1000/010	Frame with wound stator	1000	Frame with wound stator
1020	Lifting eyebolt	1020	Lifting eyebolt
1100/010	Earthing terminal	1100	Earthing terminal
1500	Rotor, complete with shaft and key	1500	Rotor, complete with shaft and key
1560	Slinger	1560	Slinger (recommended for vertical shaft up applications, non-flange mounted)
2500/010/1	Endshield, drive end	2500/1	Endshield, drain plug, shaft seal, bolts and washers
2500/080	Drain plug, drive end		
2500/100	Grease nipple, drive end (2)		
2500/280	Shaft seal, drive end (1)		
2500/010/2	FF Flange	2500/2	FF Flange, drain plug, shaft seal, bolts and washers
2500/080	Drain plug, drive end		
2500/100	Grease nipple, drive end (2)		
2500/280	Shaft seal, drive end (1)		
2500/010/3	C Flange (5)	2500/3	C Flange, drain plug, shaft seal, bolts and washers
2500/080	Drain plug, drive end		
2500/100	Grease nipple, drive end (2)		
2500/280	Shaft seal, drive end (1)		
2500/010/4	C-DIN Flange (5)	2500/4	C-DIN Flange, drain plug, shaft seal, bolts and washers
2500/080	Drain plug, drive end		
2500/100	Grease nipple, drive end (2)		
2500/280	Shaft seal, drive end (1)		
2700/010	Endshield, non-drive end	2700	Endshield, drain plug, shaft seal, bolts and washers
2700/080	Drain plug, non-drive end		
2700/100	Grease nipple, non-drive end (2)		
2700/280	Shaft seal, non-drive end (1)		
2700/470	Wave washer for axial displacement		
5000/010	Cooling Fan	5000	Fan (3)
6000/010	Fan cover (4)	6000	Fan cover, bolts
		6050	Fan cover, drip cover and bolts
6000/100	Drip cover	6100	Drip cover, bolts
6500/010	Terminal box	6500	Terminal box complete with lid, gaskets (for lid and terminal box), plugs (for mains and accessories), earthing terminal, bolts and washers
6500/050	Terminal box gasket		
6500/060	Terminal box lid		
6500/100	Terminal box lid gasket		
6501/010	Terminal box plug for main leads		
6502/010	Terminal box plug for accessory leads		
6590/010	Terminal box earthing terminal		
6531/010	Accessory connector	6531	Accessory connector, mounting rail, bolts and washers
6541/010	Accessory connector	6541	Accessory connector, mounting rail, bolts and washers
6600/010	Accessory terminal box	6600	Accessory terminal box, complete with lid, gasket, plugs, earthing terminal, bolts and washers
6600/060	Accessory terminal box lid		
6600/100	Accessory terminal box lid gasket		
6600/110	Accessory terminal box earthing terminal		
6610/010	Space heater accessory terminal box	6610	Space heater accessory terminal box, complete with lid, gasket, plugs, earthing terminal, bolts and washers
6610/060	Space heater accessory terminal box lid		
6610/100	Space heater accessory terminal box lid gasket		
6610/110	Space heater accessory terminal box earthing terminal		
6800/010	Terminal block	6800	Terminal block, bolts and washers
8500	Main nameplate	8500	Main nameplate

Notes:

(1) The shaft sealing may vary with product line. As a spare part, the shaft sealing in the 63-112 range will be supplied as an integral part of the endshield kit. If fitted with labyrinth seal, taconite or W3 Seal®, these are available available from 90 frame upwards.

(2) When fitted with grease nipple, the endshield spare part kit will also have grease relief, internal bearing cap and labyrinth seal (taconite or W3 Seal®).

(3) When non-plastic fan is fitted, the spare part kit is also supplied with key and circlip for fan assembly onto the shaft.
(4) The fan cover material may vary with product line. Considering general purpose, it is fabricated steel in the 63-112 frame range.
(5) C flange dimensions according to standards NEMA MG1 Part 4 or DIN.

26.2. Spare Parts Available 132-200

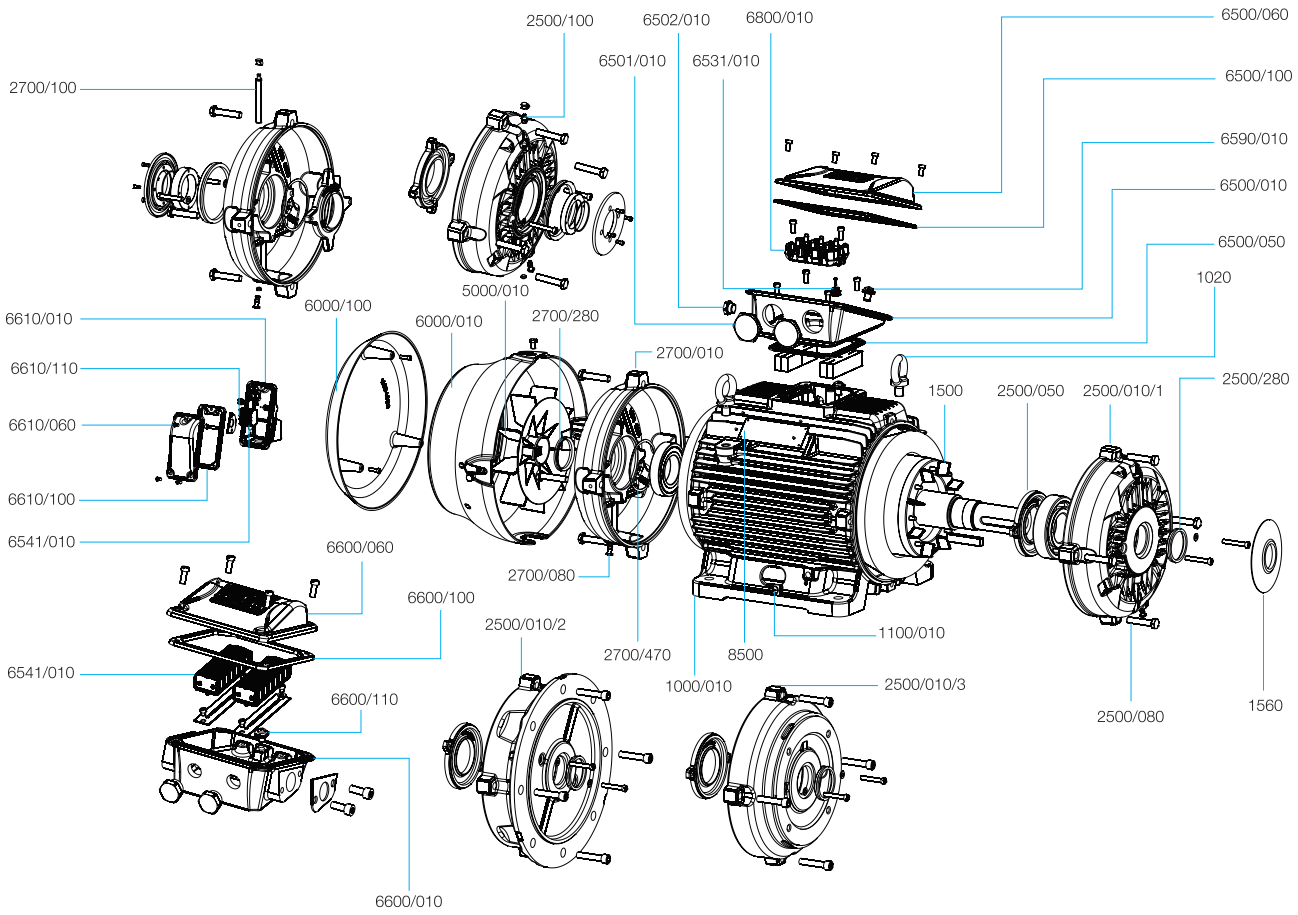

Motor component		Spare part	
Item	Description	Item	Composition
1000/010	Frame with wound stator	1000	Frame with wound stator
1020	Lifting eyebolt	1020	Lifting eyebolt
1100/010	Earthing terminal	1100	Earthing terminal
1500	Rotor, complete with shaft and key	1500	Rotor, complete with shaft and key
1560	Slinger	1560	Slinger (recommended for vertical shaft up applications, non-flange mounted)
2500/010/1	Endshield, drive end	2500/1	Endshield, bearing cap, drain plug, shaft seal, bolts and washers
2500/050	Bearing cap, internal, drive end		
2500/080	Drain plug, drive end		
2500/280	Shaft seal, drive end (1)		
2500/100	Grease nipple, drive end (2)		
2500/010/2	FF Flange	2500/2	FF Flange, drain plug, shaft seal, bolts and washers
2500/080	Drain plug, drive end		
2500/100	Grease nipple, drive end (2)		
2500/280	Shaft seal, drive end (1)		
2500/010/3	C Flange (7)	2500/3	C Flange, drain plug, shaft seal, bolts and washers
2500/080	Drain plug, drive end		
2500/280	Shaft seal, drive end (1)		
2500/100	Grease nipple, drive end (2)		
2700/010	Endshield, non-drive end	2700	Endshield, drain plug, shaft seal, bolts and washers
2700/080	Drain plug, non-drive end		
2700/100	Grease nipple (with extensor pipe), non-drive end (4)		
2700/280	Shaft seal, non-drive end (1)		
2700/470	Wave washer for axial displacement (3)		
5000/010	Fan	5000	Fan (5)
6000/010	Fan cover (6)	6000	Fan cover, bolts
		6050	Fan cover, drip cover and bolts
6000/100	Drip cover	6100	Drip cover and bolts
6500/010	Terminal box	6500	Terminal box, complete with lid, gaskets (for lid and terminal box), plugs (for mains and accessories), earthing terminal, bolts and washers
6500/050	Terminal box gasket		
6500/060	Terminal box lid		
6500/100	Terminal box lid gasket		
6501/010	Terminal box plug for main leads		
6502/010	Terminal box plug for accessory leads		
6590/010	Terminal box earthing terminal		
6531/010	Accessory connector	6531	Accessory connector, mounting rail, bolts and washers
6541/010	Accessory connector	6541	Accessory connector, mounting rail, bolts and washers
6600/010	Accessory terminal box	6600	Accessory terminal box, complete with lid, gasket, plugs, earthing terminal, bolts and washers
6600/060	Accessory terminal box lid		
6600/100	Accessory terminal box lid gasket		
6600/110	Accessory terminal box earthing terminal		
6610/010	Space heater accessory terminal box	6610	Space heater accessory terminal box, complete with lid, gasket, plugs, earthing terminal, bolts and washers
6610/060	Space heater accessory terminal box lid		
6610/100	Space heater accessory terminal box lid gasket		
6610/110	Space heater accessory terminal box earthing terminal		
6800/010	Terminal block	6800	Terminal block, bolts and washers
8500	Main nameplate	8500	Main nameplate

Notes:
(1) The shaft seal may vary with product line. As a spare part. the shaft seal in the 132-200 range will be supplied as an integral part of the endshield kit. If fitted with labyrinth seal (taconite or W3 Seal) internal bearing cap is mandatory from frame 160.
(2) When fitted with grease nipple. the endshield spare part kit will also have grease relief.
(3) Valid when ball bearing is fitted in drive end. When the drive end is fitted with roller bearings. the wave washer is not supplied (non-drive end bearing locked with internal bearing cap).
(4) When fitted with grease nipple in the non-drive end. the endshield spare part kit will also have grease relief and internal bearing cap.
(5) When non-plastic fan is fitted. the spare part kit is also supplied with key and circlip for fan assembly onto the shaft.
(6) The fan cover material may vary with product line. Considering general purpose. it is cast iron in the 160-200 range and fabricated steel in 132 frame.
(7) C flange dimensions according to NEMA MG1 Part 4 standard (frames 132-200) or DIN standard (frame 132)..

26.3. Spare Parts Available 225 - 355

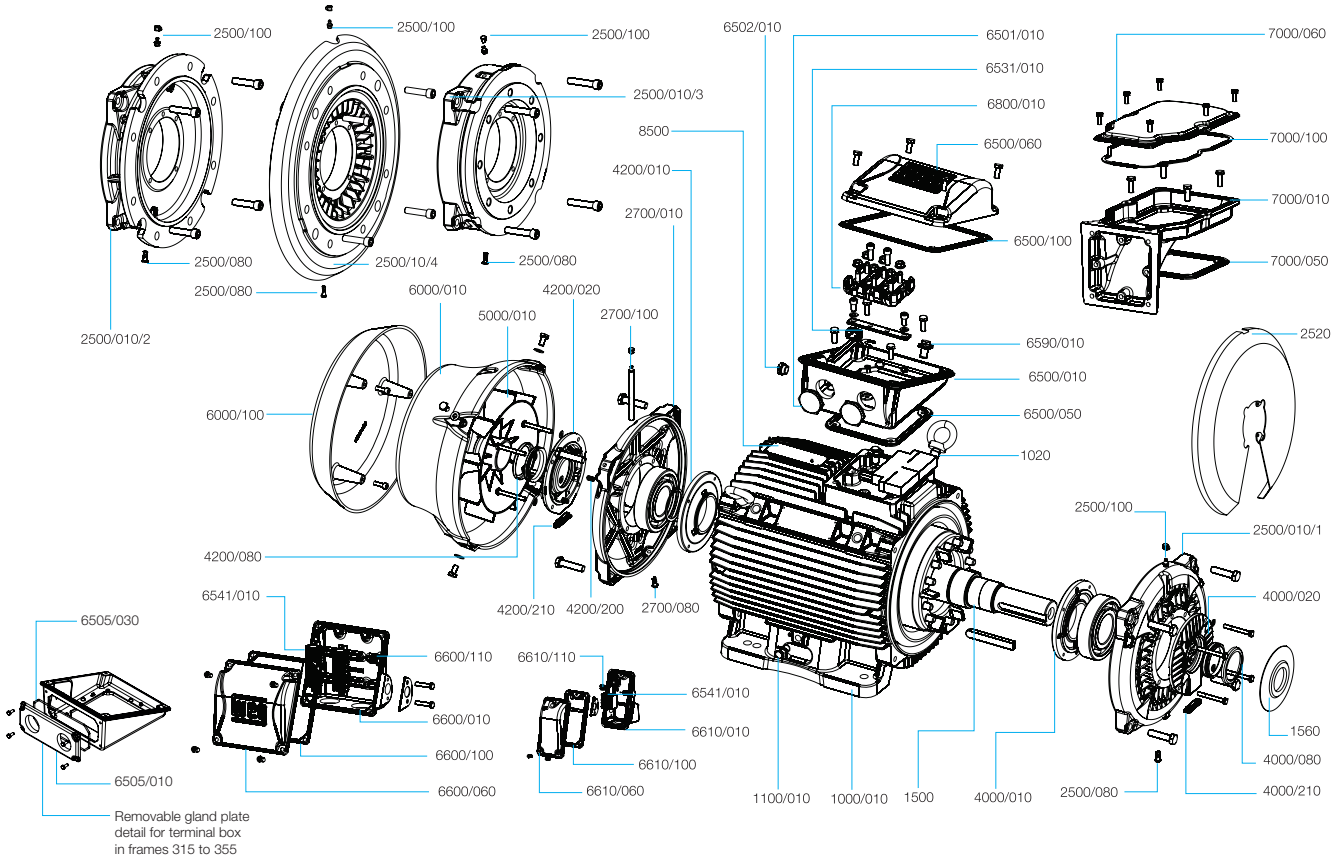

Motor component		Spare part	
Item	Description	Item	Composition
1000/010	Frame with wound stator	1000	Frame with wound stator
1020	Lifting eyebolt	1020	Lifting eyebolt
1100/010	Earthing terminal	1100	Earthing terminal
1500	Rotor, complete with shaft and key	1500	Rotor, complete with shaft and key
1560	Slinger	1560	Slinger
2500/010/1	Endshield, drive end	2500/1	Endshield, grease nipple, drain plug, bolts and washers
2500/080	Drain plug, drive end		
2500/100	Grease nipple, drive end		
2500/010/2	FF Flange	2500/2	FF Flange, grease nipple, drain plug, bolts and washers
2500/080	Drain plug, drive end		
2500/100	Grease nipple, drive end		
2500/0010/3	C Flange (5)	2500/3	C Flange, grease nipple, drain plug, bolts and washers
2500/080	Drain plug, drive end		
2500/100	Grease nipple, drive end		
2500/010/4	FF Flange with air deflector	2500/4	FF Flange with air deflector, grease nipple, drain plug, bolts and washers
2500/080	Drain plug, drive end		
2500/100	Grease nipple, drive end		
2520	Air Deflector	2520	Air Deflector
2700/010	Endshield, non-drive end	2700	Endshield, grease nipple with extensor pipe, drain plug, bolts and washers
2700/080	Drain plug, non-drive end		
2700/100	Grease nipple (with extensor pipe), non-drive end		
4000/010	Bearing cap, internal, drive end	4000	Bearing cap (external and internal), shaft seal, grease relief, bolts and washers
4000/020	Bearing cap, external, drive end		
4000/080	Shaft seal, drive end (1)		
4000/210	Grease relief		
4200/010	Bearing cap, internal, non-drive end	4200	Bearing cap (external and internal), shaft seal, grease relief with extensor pipe, pre-load springs, bolts and washers
4200/020	Bearing cap, external, non-drive end		
4200/080	Shaft seal, non-drive end (1)		
4200/200	Pre-load springs for axial displacement (2)		
4200/210	Grease relief		
5000/010	Fan	5000	Fan (3)
6000/010	Fan cover, cast iron	6000	Fan cover
		6050	Fan cover and canopy
6000/100	Canopy	6100	Canopy
6500/010	Terminal box	6500	Terminal box, complete with lid, gaskets (for lid and terminal box), plugs (for mains and accessories), earthing terminal, bolts and washers
6500/050	Terminal box gasket		
6500/060	Terminal box lid		
6500/100	Terminal box lid gasket		
6501/010	Terminal box plug for main leads		
6502/010	Terminal box plug for accessory leads		
6505/010	Terminal box removable cable gland		
6505/030	Lid gasket of the terminal box removable cable gland		
6531/010	Accessory connector	6531	Accessory connector, mounting rail, bolts and washers
6541/010	Accessory connector	6541	Accessory connector, mounting rail, bolts and washers
6590/010	Terminal box earthing terminal		
6800/010	Terminal block	6800	Terminal block, mounting rail, bolts and washers
6600/010	Accessory terminal box	6600	Accessory terminal box, complete with lid, gasket, plugs, earthing terminal, bolts and washers
6600/060	Accessory terminal box lid		
6600/100	Accessory terminal box lid gasket		
6600/110	Accessory terminal box earthing terminal		
6610/010	Space heater accessory terminal box	6610	Space heater accessory terminal box, complete with lid, gasket, plugs, earthing terminal, bolts and washers
6610/060	Space heater accessory terminal box lid		
6610/100	Space heater accessory terminal box lid gasket		
6610/110	Space heater accessory terminal box earthing terminal		
7000/010	Terminal box adaptor base	7000	Terminal box adaptor for side mounted position, complete with lid, gaskets, bolts and washers
7000/050	Terminal box adaptor base gasket		
7000/060	Terminal box adaptor lid		
7000/100	Terminal box adaptor lid gasket		
8500	Main nameplate (4)	8500	Main nameplate

Notes:
(1) The shaft sealing may vary with product line. As a spare part. the shaft sealing in the 225-355 range will be supplied as an integral part of the bearing cap kit.
(2) Valid when ball bearing is fitted in drive end. When the drive end is fitted with roller bearings. pre-load springs are not supplied (non-drive end bearing locked).
(3) When non-plastic fan is fitted. the spare part kit is also supplied with key and circlip for fan assembly onto the shaft.
(4) Main nameplate position will vary with terminal box configuration (top and side mounting)
(5) C flange dimensions according to NEMA MG1 Part 4 standard.

The scope of WEG Group solutions
is not limited to products and solutions
presented in this catalogue.
To see our portfolio, contact us.

For WEG's worldwide operations visit our website

www.weg.net

+55 47 3276.4000

motores@weg.net

Jaraguá do Sul - SC - Brazil

Cod: 50025712 | Rev: 34 | Date (m/y): 05/2025.

The values shown are subject to change without prior notice.
The information contained is reference values.